IMPORTANT:
Read Before Using

Operating/Safety Instructions

3601

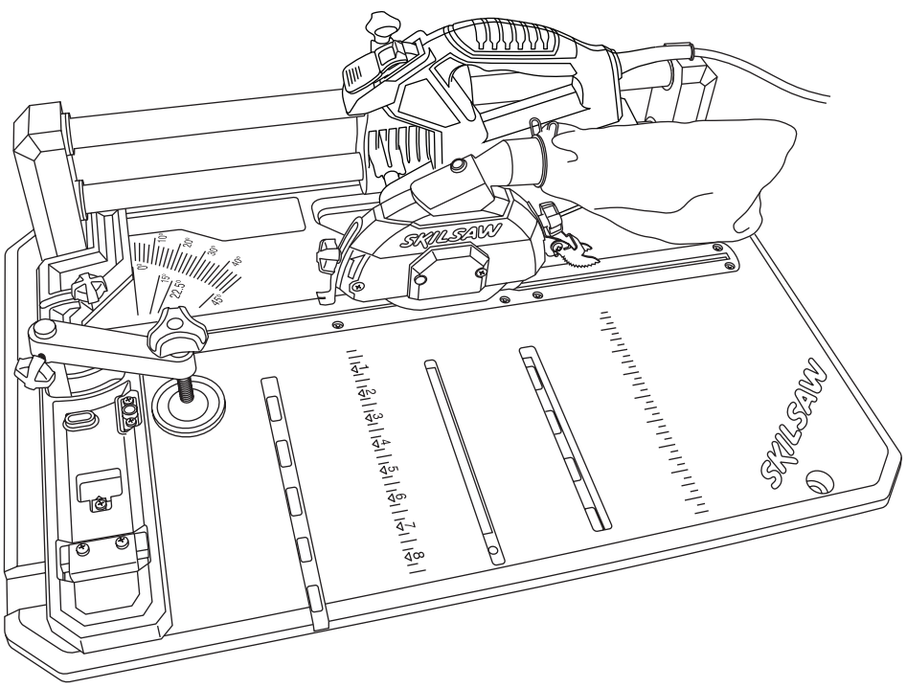

SKIL®

Safety

WARNING "READ ALL INSTRUCTIONS" — Failure to follow the SAFETY RULES identified by BULLET (•) symbol listed BELOW and other safety precautions, may result in serious personal injury.

General Safety Rules for Bench Top Tools

Work Area

- **Keep work area clean and well lit.** Cluttered benches and dark areas invite accidents.
- **Do not operate power tools in explosive atmospheres, such as in the presence of flammable liquids, gases or dust.** Power tools create sparks which may ignite the dust or fumes.
- **Keep bystanders, children and visitors away while operating a power tool.** Distractions can cause you to lose control.
- **Store idle tools out of reach of children and other untrained persons.** Tools are dangerous in the hands of untrained users.
- **Do not leave tool running unattended, turn power off.** Do not leave tool until it comes to a complete stop.
- **MAKE WORKSHOP CHILDPROOF** with padlock, master switches, or by removing starter keys.

Electrical Safety

- **Before plugging in the tool, be certain the outlet voltage supplied is compatible with the voltage marked on the nameplate within 10%.** An outlet voltage incompatible with that specified on the nameplate can result in serious hazards and damage to the tool.
- **Double insulated tools are equipped with a polarized plug (one blade is wider than the other). This plug will fit in a polarized outlet only one way. If the plug does not fit fully in the outlet, reverse the plug. If it still does not fit, contact a qualified electrician to install a polarized outlet. Do not change the plug in any way.** Double insulation eliminates the need for the three wire grounded power cord and grounded power supply.
- **Avoid body contact with grounded surfaces such as pipes, radiators, ranges and refrigerators.** There is an increased risk of electric shock if your body is grounded.
- **Do not expose power tools to rain or wet conditions.** Water entering a power tool will increase the risk of electric shock.
- **Do not abuse the cord. Never use the cord to carry the tools or pull the plug from an outlet. Keep cord away from heat, oil, sharp edges or moving parts. Replace damaged cords immediately.** Damaged cords increase the risk of electric shock.
- **When operating a power tool outside, use an outdoor extension cord marked "W-A" or "W".** These cords are rated for outdoor use and reduce the risk of electric shock.

Personal Safety

- **Stay alert, watch what you are doing and use common sense when operating a power tool.** A moment of inattention or use of drugs, alcohol or medication while operating power tools can be dangerous.
- **Dress properly. Do not wear loose clothing or jewelry. Contain long hair. Keep your hair, clothing and gloves away from moving parts. Loose clothes, jewelry or long hair can be caught in moving parts.** Roll long sleeves above elbows. Rubber gloves and non-skid footwear are recommended when working outdoors.
- **Avoid accidental starting. Be sure switch is "OFF" before plugging in.** Carrying tools with your finger on the switch or plugging in tools that have the switch "ON" invites accidents.
- **Remove adjusting keys or wrenches before turning the tool "ON".** A wrench or a key that is left attached to a rotating part of the tool will be thrown.
- **Do not overreach, keep proper footing and balance at all times.** Proper footing and balance enables better control of the tool in unexpected situations.
- **Do not stand on tool or its stand.** Serious injury may occur if the tool is tipped or if the cutting tool is accidentally contacted. Do not store materials on or near the tool such that it is necessary to stand on the tool or its stand to reach them.
- **Use safety equipment. Always wear safety goggles.** Dust mask, safety shoes, hard hat or hearing protection must be used for appropriate conditions. Everyday eyeglasses only have impact resistant lenses. They are NOT safety glasses

"SAVE THESE INSTRUCTIONS"

Safety

WARNING "READ ALL INSTRUCTIONS" — Failure to follow the SAFETY RULES identified by BULLET (•) symbol listed BELOW and other safety precautions, may result in serious personal injury.

Tool Use and Care

- **Use clamps or other practical way to secure and support the workpiece to a stable platform.** Holding the work by hand or against your body is unstable. It allows for work to shift, causes binding of the tool and loss of control.
- **Do not force tool. Use the correct tool for your application.** The correct tool will do the job better and safer at the rate for which it is designed. Do not use the tool for purpose not intended - for example; do not use the flooring saw for slicing meats.
- **Do not use tool if switch does not turn it "ON" or "OFF".** Any tool that cannot be controlled with the switch is dangerous.
- **Disconnect the plug from the power source before making any adjustments or changing accessories.** Such preventive safety measures reduce the risk of starting the tool accidentally.
- **Keep cutting tools sharp and clean.** Properly maintained tools, with sharp cutting edges, are less likely to bind and easier to control. When mounting saw blades be certain that the arrow on the blade matches the direction of the arrow marked on the tool and that the teeth are also pointing in the same direction.
- **Inspect guards before using a tool. Keep guards in place. Check moving parts for binding or any other condition that may affect the normal operation or safety features of the tool. If damaged, have tool serviced before using the tool.** Many accidents are caused by poorly maintained tools.
- **Do not alter or misuse tool.** Any alteration or modification is a misuse and may result in serious personal injury.
- **The use of any other accessories not specified in this manual may create a hazard.** Accessories that may be suitable for one type of tool, may become hazardous when used on an inappropriate tool.

Service

- **Tool service must be performed only by qualified repair personnel.** Service or maintenance performed by unqualified personnel may result in misplacing internal wires and components which could cause serious hazard.
- **When servicing a tool, use only identical replacement parts. Follow instructions in the Maintenance section of this manual.** Use of unauthorized parts or failure to follow Maintenance Instructions may create a hazard.

Safety Rules for Flooring Saws

- **Always disconnect the power cord from the power source before making any adjustments or attaching any accessories.** You may unintentionally start the saw, leading to serious personal injury.
- **Flooring saws are intended to cut wood or woodlike products only. Do not use this saw to cut metals, even with a special blade designed to cut these materials. Do not use this saw to cut any masonry material, even with abrasive cut-off wheels.** Cutting metals or masonry materials could cause personal injury and tool damage.
- **Do not use the saw until the table is clear of all tools, wood scraps, etc., except the workpiece.** Small debris or loose pieces of wood or other objects that contact the revolving blade can be thrown with high speed at the operator.
- **Cut only one workpiece at a time.** Multiple workpieces cannot be adequately clamped or braced and may bind on the blade or shift during cutting.
- **Be certain the flooring saw is mounted or placed on a level, firm work surface before using.** A level and firm work surface reduces the risk of the flooring saw becoming unstable.
- **This tool is not equipped with provisions for attaching an auxiliary fence.** Insure that the work piece is supported by the fence before cutting.
- **Plan your work. Provide adequate support accessories such as tables, saw horses, table extension, etc. for workpieces wider or longer than the table top.** Workpieces longer than the flooring saw table can tip if not securely supported. If the cutoff piece or workpiece tips it can lift the lower guard or be thrown by the spinning blade.
- **Do not use another person as a substitute for a table extension or as additional support.** Unstable support for the workpiece can cause the blade to bind or the workpiece to shift during the cutting operation pulling you and the helper into the spinning blade.
- **The cutoff piece must not be jammed against or pressured by any other means against the spinning saw blade.** If confined, i.e. using length stops, it could get wedged against the blade and thrown violently.
- **Let the blade reach full speed before contacting the workpiece.** This will help avoid thrown workpieces.

"SAVE THESE INSTRUCTIONS"

Safety

WARNING "READ ALL INSTRUCTIONS" — Failure to follow the SAFETY RULES identified by BULLET (•) symbol listed BELOW and other safety precautions, may result in serious personal injury.

- **If the workpiece or blade becomes jammed or bogged down, turn flooring saw "OFF". Wait for all moving parts to stop and unplug the flooring saw, then work to free the jammed material.** Continued sawing with jammed workpiece could cause loss of control or damage to flooring saw.
- **After finishing the cut, turn flooring saw "OFF" and wait for blade to stop before removing work or cutoff piece. If blade does not stop within ten (10) seconds, unplug the saw and follow the instructions in the Troubleshooting section.** REACHING WITH YOUR HAND UNDER A COASTING BLADE IS DANGEROUS!

CROSSCUT OPERATION

- **Use clamps to support workpiece whenever possible. If supporting the workpiece by hand, you must always keep hand outside of the intended line of cutting. Do not use this saw to cut pieces that are too small to be securely clamped.**
- **Do not feed workpiece into the blade or cut "freehand" in any way. Workpiece must be stationary and clamped or braced by your hand.** Saw must be fed through the workpiece smoothly and at a rate which will not overload the saw's motor.
- **Do not reach in back of the saw blade behind the fence with either hand to hold down or support the workpiece, remove wood scraps, or for any other reason.** The proximity of the spinning saw blade to your hand may not be obvious and you may be seriously injured.
- **Inspect your workpiece before cutting. if workpiece is bowed or warped, clamp it with the outside bowed face toward the fence. Always make certain that there is no gap between the workpiece, fence and table along the line of the cut.** Bent or warped workpieces can twist or rock and may cause binding on the spinning saw blade while cutting. Also, make sure there are no nails or foreign objects in the workpiece.
- **Always use a clamp or a fixture designed to properly support round material such as dowel rods, or tubing.** Rods have a tendency to roll while being cut, causing the blade to "bite" and pull the work with your hand into the blade.
- **When cutting irregularly shaped workpieces, plan your work so it will not slip and pinch the blade and be torn from your hand.** A piece of molding, for example, must lie flat or be held by a fixture or jig that will not let it twist, rock or slip while being cut.

LOCATION

Use the flooring saw in a well lit area and on a level surface, clean and smooth enough to reduce the risk of trips and falls. Use it where neither the operator nor the casual observer is forced to stand in line with the blade.

KICKBACK

Kickbacks can cause serious injury: A "KICKBACK" occurs when a part of the workpiece binds between the sawblade and the rip fence or other fixed object. Workpiece binding the blade due to misalignment, can also cause kickback. During kickback, workpiece rises from table and is thrown toward the operator. Keep your face and body to one side of the sawblade, out of line with a possible "KICKBACK".

KICKBACKS AND POSSIBLE INJURY CAN USUALLY BE AVOIDED BY:

a. Maintaining the rip fence parallel to the sawblade.

b. Keeping the sawblade sharp. Replacing or sharpening anti-kickback pawls when points become dull.

c. Keeping sawblade guard, spreader and anti-kickback pawls in place and operating properly. The spreader must be in alignment with the sawblade and the pawls must stop a kickback once it has started. Check their action before ripping.

d. NOT ripping workpiece that is twisted or warped or does not have a straight edge to guide along the rip fence.

e. NOT releasing work until you have pushed it all the way past the sawblade.

f. Using a Push Stick for ripping widths of 1-3/4" to 6" and using a piece of scrap wood to push the workpiece to complete the ripping operations when ripping width is too narrow (less than 1-3/4") to allow the use of a push stick.

g. NOT confining the cut-off piece when ripping or cross-cutting.

h. When ripping, apply the feed force to the section of the workpiece between the sawblade and the rip fence. Use Push Stick or scrap wood when appropriate (See item f. above).

PROTECTION: Eyes, hands, face, ears and body.

TO AVOID BEING PULLED INTO THE SPINNING TOOL:

DO NOT WEAR: **Loose Fitting Gloves**
Loose Clothing
Necktie, Jewelry

DO: **TIE BACK LONG HAIR**
ROLL LONG SLEEVES ABOVE ELBOWS

a. If any part of your saw is missing, malfunctioning, has been damaged or broken … such as the motor switch, or other operating control, a safety device or the power cord … cease operating immediately until the particular part is properly repaired or replaced.

"SAVE THESE INSTRUCTIONS"

Safety

WARNING "READ ALL INSTRUCTIONS" — Failure to follow the SAFETY RULES identified by BULLET (•) symbol listed BELOW and other safety precautions, may result in serious personal injury.

b. Wear safety goggles and a face shield if operation is dusty. Wear ear plugs or muffs during extended periods of operation. Small loose pieces of wood or other objects that contact the rear of the revolving blade can be thrown back at the operator at excessive speed. This can usually be avoided by keeping the guard and spreader in place for all "THRU-SAWING" operations (sawing entirely thru the work) AND by removing all loose pieces from the table with a long stick of wood IMMEDIATELY after they are cut off.

c. NEVER turn the saw "ON" before clearing the table of all tools, wood scraps, etc., except the workpiece and related feed or support devices for the operation planned.

d. NEVER place your face or body in line with the cutting tool.

• NEVER place your fingers and hands in the path of the sawblade or other cutting tool.

• NEVER reach in back of the cutting tool with either hand to hold down or support the workpiece, remove wood scraps, or for any other reason. Avoid awkward operations and hand positions where sudden slip could cause fingers or hand to move into a sawblade or other cutting tool.

• DO NOT perform any operation "FREEHAND" — always use the fence to position and guide the work for both rip cuts and crosscuts.

• NEVER hold onto or touch the "free end" of the workpiece or a "free piece" that is cut off, while power is "ON" and/or the sawblade is rotating.

• Shut "OFF" the saw and disconnect the power cord when removing the table insert, changing the cutting tool, or making adjustments.

• Provide adequate support to the rear and sides of the saw table for wider or long workpieces.

• Plastic and composition (like hardboard) materials may be cut on your saw. However, since these are usually quite hard and slippery, the anti-kickback pawls may not stop a kickback. Therefore, be especially attentive to following proper set-up and cutting procedures for ripping. Do not stand, or permit anyone else to stand, in line with a potential kickback.

f. If you stall or jam the sawblade in the workpiece, turn saw "OFF", remove the workpiece from the sawblade, and check to see if the sawblade is parallel to the table slots or grooves and if the spreader is in proper alignment with the sawblade. If ripping at the time, check to see if rip fence is parallel with the sawblade. Readjust as indicated.

g. NEVER gang crosscut — lining up more than one workpiece in front of the blade (stacked vertically, or horizontally outward on the table) and then pushing thru sawblade. The blade could pick up one or more pieces and cause a binding or loss of control and possible injury.

h. DO NOT remove small pieces of cut-off material that may become trapped inside the blade guard while the saw is running. This could endanger your hands or cause a kickback. Turn saw "OFF" and wait until blade stops.

KNOW YOUR CUTTING TOOLS

Dull, gummy or improperly sharpened or set cutting tools can cause material to stick, jam, stall the saw, or kickback at the operator. Minimize potential injury by proper cutting tool and machine maintenance. NEVER ATTEMPT TO FREE A STALLED SAWBLADE WITHOUT FIRST TURNING THE SAW OFF.

a. NEVER use grinding wheels, abrasive cut-off wheels, friction wheels (metal slitting blades) wire wheels or buffing wheels.

b. USE ONLY RECOMMENDED ACCESSORIES.

d. Make sure the cutting tool rotates in the same direction as the rotation arrow on the upper guard. Also make sure the cutting tool, arbor collars and arbor nut are installed properly. Keep the cutting tool as low as possible for the operation being performed. Keep all guards in place whenever possible.

• Do not use any blade or other cutting tool marked for an operating speed less than 11,000 R.P.M. Never use a cutting tool larger in diameter than the diameter for which the saw was designed. For greatest safety and efficiency when ripping, use the maximum diameter blade for which the saw is designed, since under these conditions the spreader is nearest the blade.

e. Make sure the table insert is flush or slightly below the table surface on all sides except for rear side. NEVER operate the saw unless the proper insert is installed.

WARNING **Some dust created by power sanding, sawing, grinding, drilling, and other construction activities contains chemicals known to cause cancer, birth defects or other reproductive harm. Some examples of these chemicals are:**

- Lead from lead-based paints,
- Crystalline silica from bricks and cement and other masonry products, and
- Arsenic and chromium from chemically treated lumber.

Your risk from these exposures varies, depending on how often you do this type of work. To reduce your exposure to these chemicals: work in a well ventilated area, and work with approved safety equipment, such as those dust masks that are specially designed to filter out microscopic particles.

- **There are additional safety instructions for particular operations of the saw in the operating section. Read the rest of the manual for safe operation.**

"SAVE THESE INSTRUCTIONS"

Safety

⚠ WARNING "READ ALL INSTRUCTIONS" — Failure to follow the SAFETY RULES identified by BULLET (•) symbol listed BELOW and other safety precautions, may result in serious personal injury.

- **Do not allow familiarity gained from frequent use of your flooring saw to become commonplace.** Always remember that a careless fraction of a second is sufficient to inflict severe injury.
- THINK SAFETY! SAFETY IS A COMBINATION OF OPERATOR'S COMMON SENSE, KNOWLEDGE OF THE SAFETY AND OPERATING INSTRUCTIONS AND ALERTNESS AT ALL TIMES WHEN THE FLOORING SAW IS BEING USED.

⚠ WARNING THE WARNINGS SHOWN BELOW CAN BE FOUND ON YOUR TOOL. THESE WARNINGS ARE ONLY A CONDENSED FORM OF THE MORE DETAILED SAFETY RULES AND PRECAUTIONS THAT APPEAR IN YOUR OWNER'S MANUAL. THEY SERVE AS A REMINDER OF ALL SAFETY RULES NEEDED FOR SAFE OPERATION OF THIS FLOORING SAW.

"SAVE THESE INSTRUCTIONS"

Motor Specifications and Electrical Requirements

General Specifications

Voltage Rating . . . . . .120 V, 60 Hz

Amperage Rating . . . . . .7 A

No Load Speed . . . . . .n_o 11,000/min

Table size . . . . . .27” x 17-3/4”

Double Insulated Tools

Double Insulation ⧈ is a design concept used in electric power tools which eliminates the need for the three wire grounded power cord and grounded power supply system. It is a recognized and approved system by Underwriter’s Laboratories, CSA and Federal OSHA authorities.

IMPORTANT: Servicing of a tool with double insulation requires care and knowledge of the system and should be performed only by a qualified service technician.

WHEN SERVICING, USE ONLY IDENTICAL REPLACEMENT PARTS.

POLARIZED PLUGS. To reduce the risk of electric shock, your tool is equipped with a polarized plug (one blade is wider than the other), this plug will fit in a polarized outlet only one way. If the plug does not fit fully in the outlet, reverse the plug. If it still does not fit, contact a qualified electrician to install the proper outlet. To reduce the risk of electric shock, do not change the plug in any way.

Extension Cords

Replace damaged cords immediately. Use of damaged cords can shock, burn or electrocute.

Always use proper extension cord. If an extension cord is necessary, a cord with adequate size conductors should be used to prevent excessive voltage drop, loss of power or overheating. The table shows the correct size to use, depending on cord length and nameplate amperage rating of tool. If in doubt, use the next heavier gauge. Always use U.L. and CSA listed extension cords.

RECOMMENDED SIZES OF EXTENSION CORDS
120 VOLT ALTERNATING CURRENT TOOLS

Tool’s Ampere Rating	Cord Size in A.W.G.				Wire Sizes in mm^2			
	Cord Length in Feet				Cord Length in Meters			
	25	50	100	150	15	30	60	120
3-6	18	16	16	14	.75	.75	1.5	2.5
6-8	18	16	14	12	.75	1.0	2.5	4.0
8-10	18	16	14	12	.75	1.0	2.5	4.0
10-12	16	16	14	12	1.0	2.5	4.0	—
12-16	14	12	—	—	—	—	—	—

NOTE: The smaller the gauge number, the heavier the cord.

“SAVE THESE INSTRUCTIONS”

Table of Contents

Glossary of Terms

WORKPIECE
The item on which the cutting operation is being performed. The surfaces of a workpiece are commonly referred to as faces, ends and edges.

ANTI-KICKBACK PAWLS
Device which, when properly maintained, is designed to stop the workpiece from being kicked back at the operator during operation.

ARBOR
The shaft on which a blade is mounted.

CROSSCUT
A cutting or shaping operation made across the width of the workpiece cutting the workpiece to length.

FREEHAND
Performing a cut without a fence, miter gauge, fixture, hold down or other proper device to keep the workpiece from twisting during the cut.

GUM
A sticky, sap-based residue from wood products. After it has hardened, it is referred to as “RESIN”.

HEEL
Misalignment of the blade which causes the trailing or outfeed side of the blade to contact the cut surface of the workpiece. Heel can cause kickback, binding, excessive force, burning of the workpiece or splintering. In general, heel creates a poor quality cut and can be a safety hazard.

KERF
The amount of material removed by the blade in a through cut or slot produced by the blade in a non-through or partial cut.

KICKBACK
An uncontrolled grabbing and throwing of the workpiece back toward the front of the saw during a rip type operation.

LEADING END
The end of the workpiece which, during a rip type operation, is pushed into the cutting tool first.

PUSH STICK
A device used to feed the workpiece through the saw during narrow ripping-type operation and helps keep the operator’s hands well away from the blade. Use the Push Stick for rip widths less than 6 inches and more than 2 inches.

RIPPING
A cutting operation along the length of the workpiece cutting the workpiece to width.

REVOLUTIONS PER MINUTE (R.P.M.)
The number of turns completed by a spinning object in one minute.

Unpacking and Checking Contents

WARNING **To reduce the risk of injury, never connect plug to power source outlet until all assembly steps are complete and until you have read and understood the entire owner's manual.**

Model 3601 Flooring Saw is shipped complete in one box.

Unpacking and Checking Contents. Separate all parts from packing materials and check each one with the "Table of Loose Parts" to make sure all items are accounted for before discarding any packing material.

WARNING **If any parts are missing, do not attempt to assemble the saw, plug in power cord or turn the switch on until the missing parts are obtained and are installed correctly.**

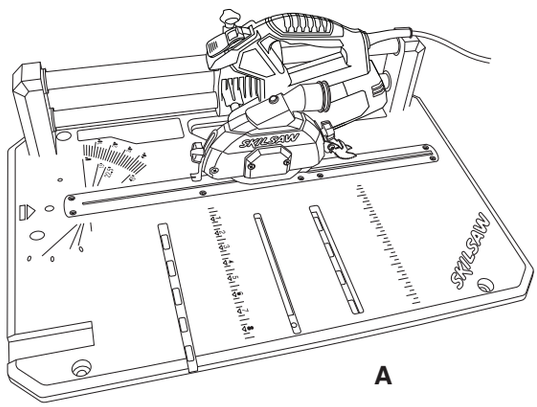

Table of Loose Parts

ITEM	DESCRIPTION	QTY.
A	Flooring Saw	1
B	Vise Clamp Assembly	1
C	Dust Port	1
D	Dust Bag	1
E	Fence	1
F	Fence Knob	1
G	Wrench (underneath table)	1
H	Push Stick (underneath table)	1

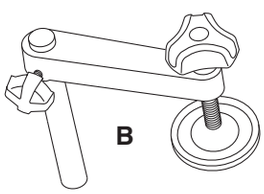

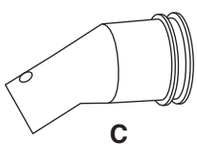

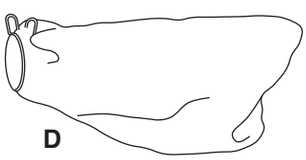

Additional Tools Needed For Assembly

Phillips Head Screwdriver

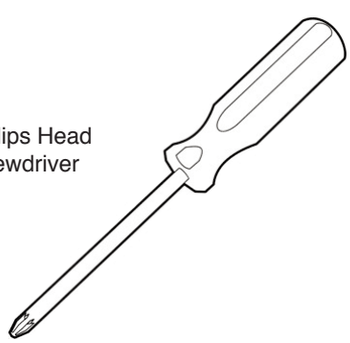

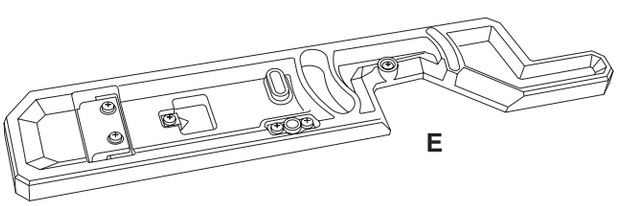

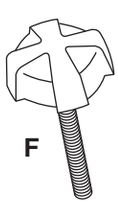

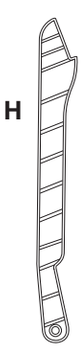

Getting To Know Your Flooring Saw

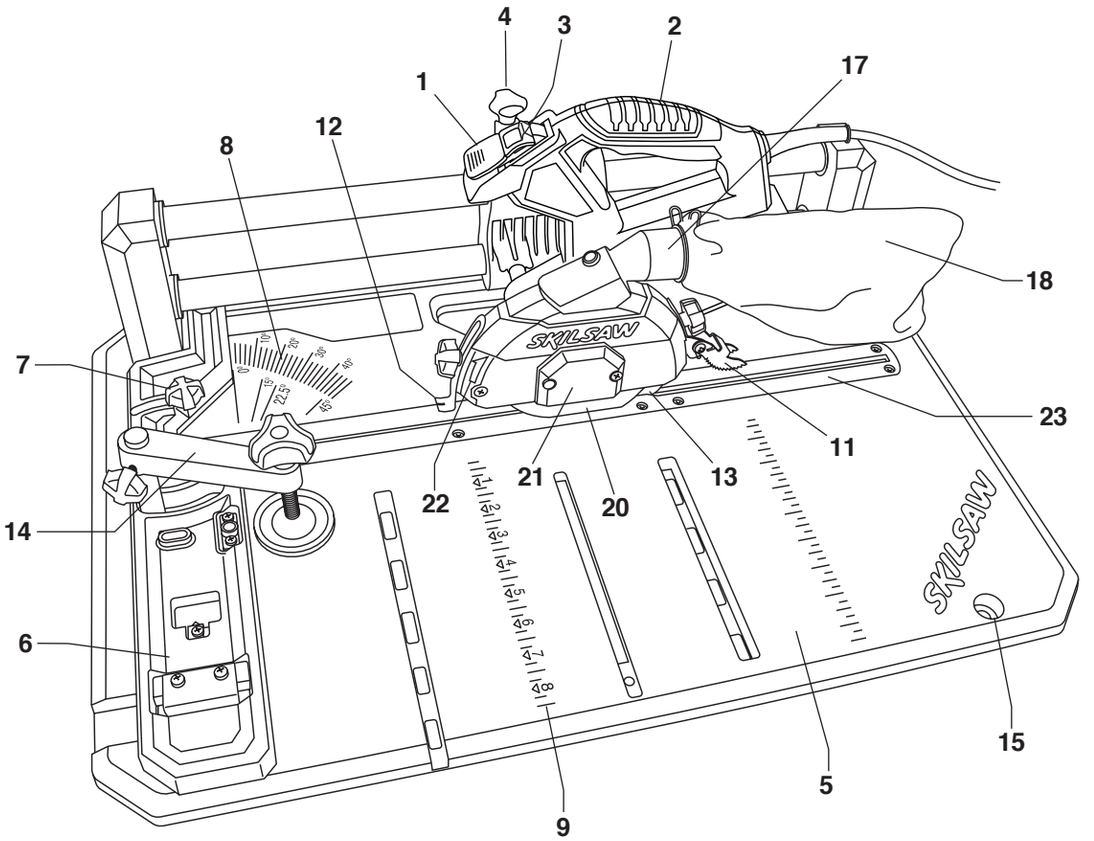

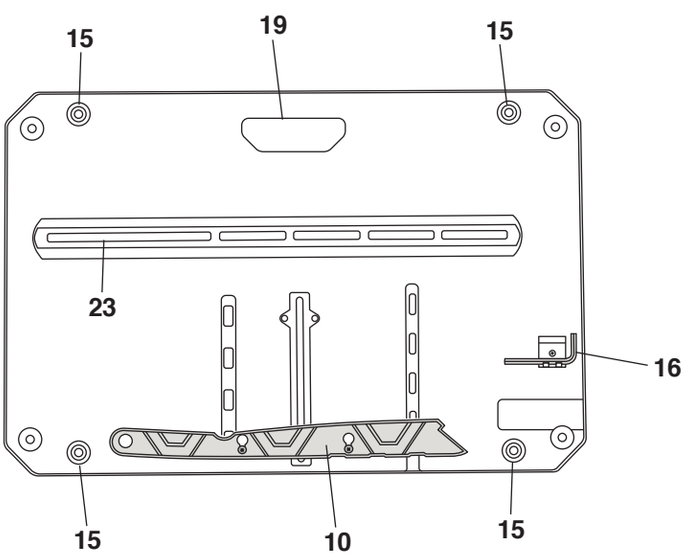

Underside of Table

1. Switch
2. Handle
3. Lock-out Switch Key (removable)
4. Saw Assembly Lock Knob
5. Table
6. Fence
7. Fence Lock Knob
8. Miter Scale
9. Ripping Scale
10. Push Stick Storage
11. Anti-Kickback Pawls
12. Front Hold Down Bracket
13. Spreader/Riving Knife
14. Vise Clamp
15. Tool Mounting Pads
16. Hex Wrench
17. Sawdust Port
18. Dust Collection Bag
19. Carrying Handle
20. Blade Guard
21. Blade Bolt Cover
22. Blade Rotation Arrow
23. Blade Install/Removal Slot

Assembly and Adjustments

WARNING **To reduce the risk of injury, never connect plug to power source outlet until all assembly steps are completed.**

Rip Fence Alignment

See figure 1.

1. Loosen fence locking knob.
2. Using a phillips screwdriver, loosen the two screws of the fence alignment plate.
3. Adjust fence until it is aligned with two corresponding indicator marks.
4. Tighten fence locking knob.
5. Re-tighten both screws on fence alignment plate.

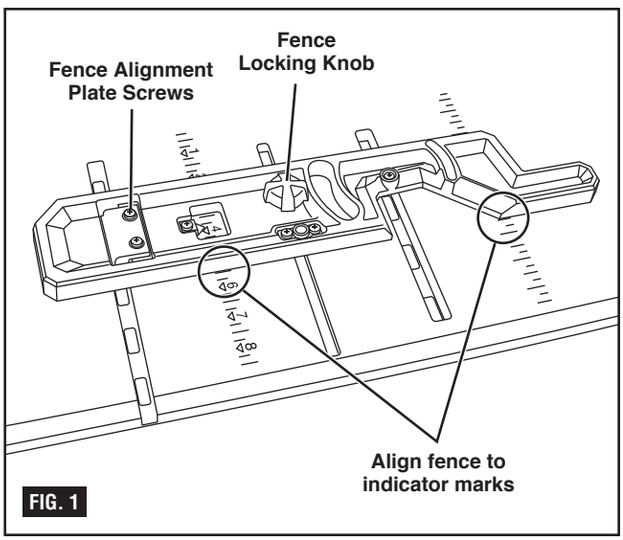

FIG. 1

Rip Fence Pointer Adjustment

See figure 2.

The distance of the fence from the blade when ripping is determined by lining the pointer with the desired dimension on the scale.

To adjust the rip fence pointer:

1. Loosen fence locking knob.
2. Slide fence to a specific length (example: 4”).
3. Tighten fence locking knob.
4. Using a scrap piece of wood, make a small cut.
5. Measure your cut. If needed, adjust the fence until your cut equals your desired length (4”).
6. Loosen pointer adjustment screw
7. Align pointer to mark on scale (4”).
8. Re-tighten pointer adjustment screw.

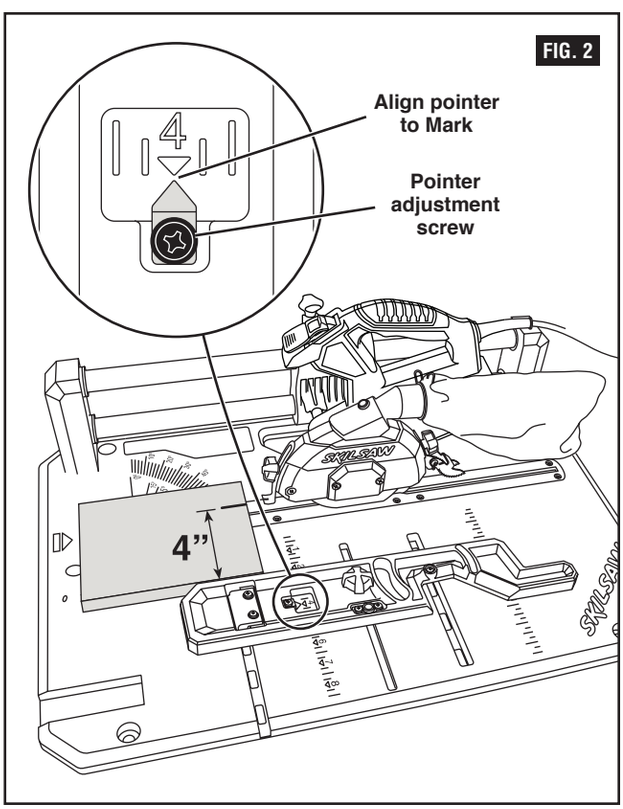

FIG. 2

Assembly and Adjustments

Blade Removal and Installation

See figures 3-6.

WARNING **To reduce the risk of personal injury, always disconnect plug from power source before changing blades.**

Using the Correct Blade

Blade dimensions: 4-3/8" (110mm) diameter
3/4" Arbor
MIN RPM 11,000/min

IMPORTANT: The saw blade provided on this tool has a carbide-tipped kerf width of .078" (2mm) and a plate (body) thickness that is .047" (1.2mm) thick. When looking for a replacement blade, select one with dimensions close to the original blade. This information may not be printed on the blades packaging. If not, check the manufacturers catalog or website. Skil offers an extensive line of Premium-Quality Professional Saw Blades that match the requirements for this tool. You must select a blade with a kerf width of .061" or more and a plate (body) thickness .057" or less (Fig. 3).

WARNING **To reduce the risk of injury, do not use extra thin kerf saw blades.** The kerf of the blade must be wider than .061". Extra thin kerf saw blades (less than .061") may cause the work piece to bind against the riving knife during cutting. It is recommended that the kerf of the replacement blade used on this saw be .061" or more.

WARNING **To reduce the risk of injury, do not use saw blades made with a thick body plate.** If the replacement saw blade's plate thickness is greater than .057", the riving knife would not properly serve as an aid to reduce kickback. The replacement blade's plate thickness must be less than .057".

Changing the Blade

WARNING Carbide is a very hard but brittle material. Care should be taken to prevent accidental damage. Striking tip can damage carbide. Cutting through nails, wiring, or other hard objects embedded in the workpiece may cause tips to crack or break off. Never use if damage (breakage, cracks, loose tips) is suspected. Never use on metal or masonry.

NOTE: Clean blade of any excess oil before installation.

1. Place flooring saw on side for more convenent blade changing.
2. Slide the saw assembly back to its farthest position. This is the position in which the blade can be removed from saw.
3. Using a phillips head screwdriver, remove the rear screw on the blade bolt cover and rotate the cover clear of the blade bolt.
4. Push and hold in the arbor lock to lock the blade in place. Using the hex wrench (included), turn the blade bolt clockwise to remove it.

   NOTE: The blade bolt has a left hand thread.

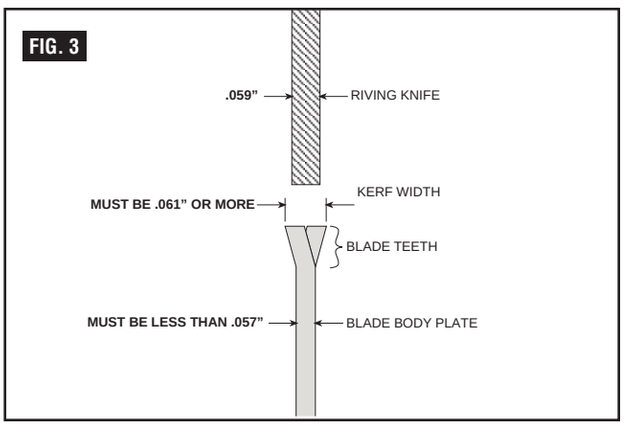

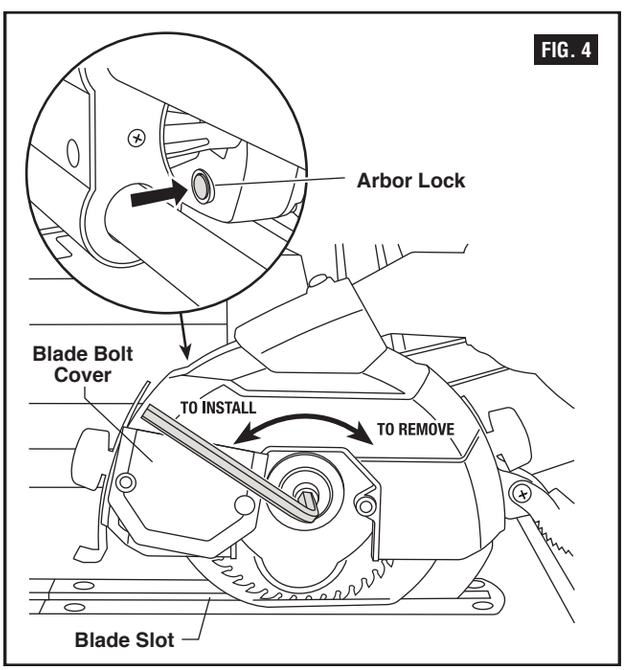

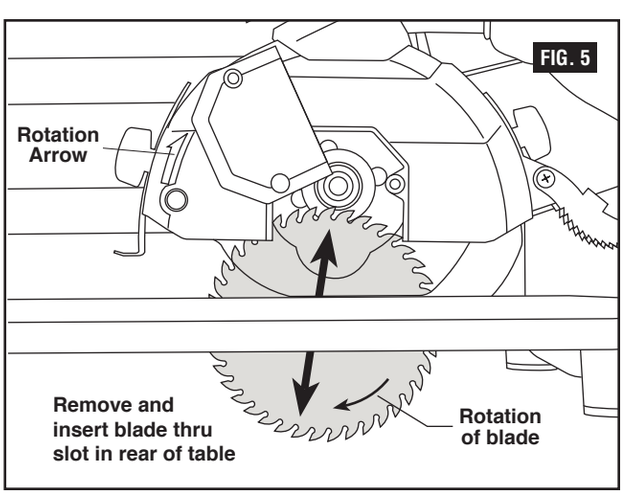

Assembly and Adjustments

5. Remove the blade bolt and blade collar.
6. Remove blade by sliding it down through the kerf insert and out through the underside of the table.

   NOTE: Inner washer does not need to be removed.
7. Install a 4-3/8" (110mm) blade.

   NOTE: Make sure the rotation arrow on the blade matches the rotation arrow on the upper guard.

To avoid injury, do not use a blade larger or smaller than 4-3/8" diameter and 3/4" arbor.

8. Install the blade collar in the proper orientation, then install blade bolt. Tighten blade bolt finger tight. Press the arbor lock and tighten blade bolt securely, but do not overtighten.
9. Be sure the arbor lock is released so the blade turns freely.
10. Close blade bolt cover, insert rear screw, and tighten.

After installing a new blade, check for any contact with the base or table structure. If blade contacts table, seek authorized service.

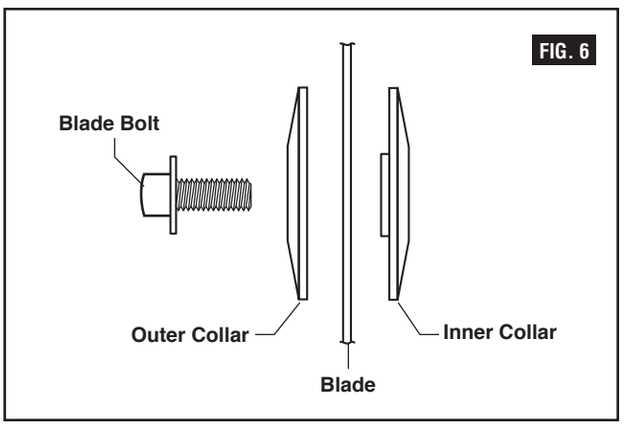

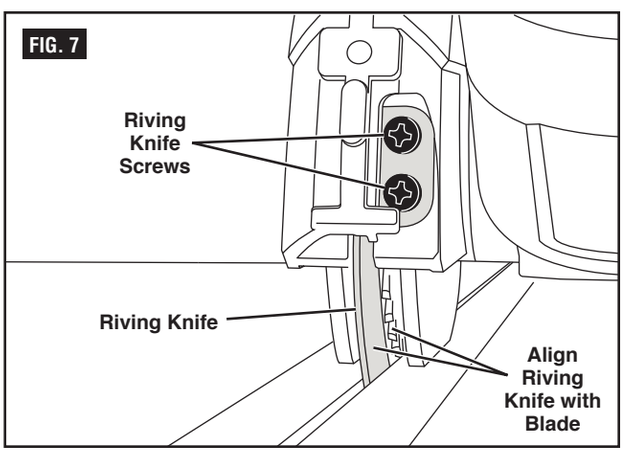

Riving Knife Alignment

See figures 6-7.

WARNING Disconnect plug from power source before performing any assembly, adjustment or repair to avoid possible injury.

1. Remove the anti-kickback pawls.
2. Using a philips screwdriver, slightly loosen the two screws which mount the riving knife to the blade guard.
3. Align the riving knife in line with the blade.
4. Re-tighten both riving knife screws.

Assembly and Adjustments

Mounting to Workbench

See figure 8.

If saw is to be used in a permanent location, it should be fastened securely to a firm supporting surface such as a stand or workbench, using the four mounting holes.

When mounting saw to a workbench or plywood, holes should be drilled through the supporting surface of the workbench or plywood and a opening MUST be made the same size as the opening in the bottom of the saw, so the saw dust can drop through.

Each of the four mounting holes should be bolted securely using 5/16" hex nuts (not included). Screw lengths should be 2" longer than the thickness of the bench top.

1. Locate and mark where the saw is to be mounted.
2. Drill four (4) 3/8" diameter holes through workbench.
3. Place saw on workbench aligning holes in base with holes drilled in workbench.
4. Insert four (4) 5/16" screws and tighten.

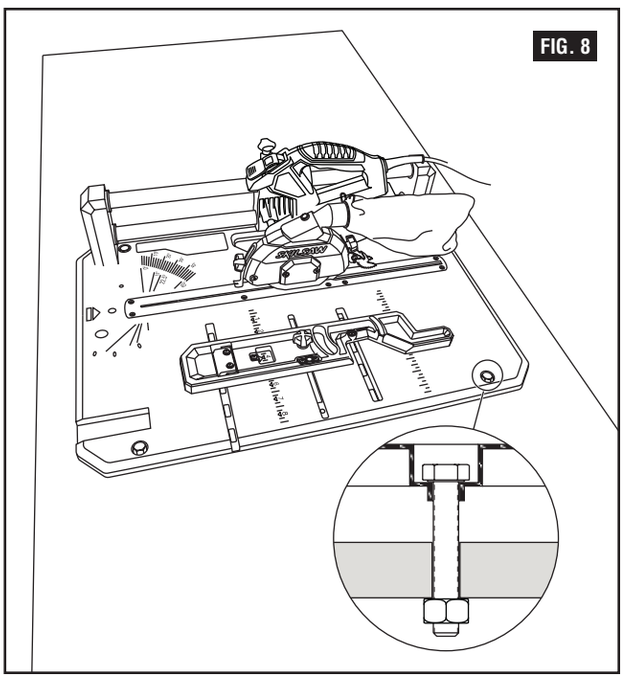

Mounting to Plywood

See figure 9.

An alternative method of securing your saw is to fasten the saw base to a mounting board 24" x 24" minimum size to prevent saw from tipping while in use. Any good grade of plywood with a 3/4" minimum thickness is recommended.

1. Follow instructions for mounting to workbench, substituting a plywood board 24" x 33" minimum size and using 5/16" flat head machine screws, flat washers, and hex nuts (not included). Screw length must be so screws do not protrude above table top surface. Insert screws up through mounting board and through base holes. Place flat washers on stud and secure with hex nuts.

NOTE: For proper stability, holes must be counter sunk on bottom side of plywood so screw heads are flush with the bottom surface of the supporting board.

2. Securely clamp board to workbench using two or more “C” clamps, as shown.

Supporting surface where saw is to be mounted should be examined carefully after mounting to insure that no movement can occur during use. If any tipping or walking is noted, secure the workbench or stand before operating the table saw.

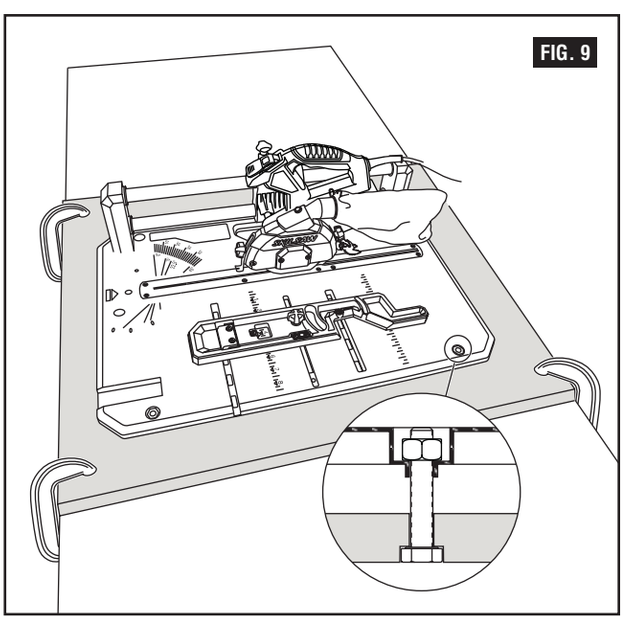

Operation

Keeping Area Clean

Sawdust and wood chips that fall under the saw will accumulate on the floor. Make it a practice to pick up and discard this dust when you have completed cutting.

Sawdust Port

See figure 10.

The sawdust port is located at the rear of the upper guard. A dust collection system or dust bag can be attached to this port to aid in the removal of sawdust from the work area. The sawdust port accepts a standard 1-1/4” vacuum hose.

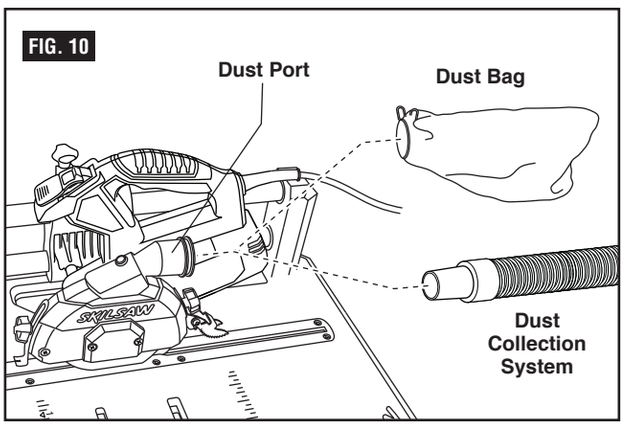

Saw Assembly Lock

See figure 11.

⚠ WARNING To reduce the risk of injury, make sure the switch is OFF before locking saw into ripping operation.

The saw assembly lock is used to lock the saw in place while performing rip cuts.

To engage and lock saw assembly: pull saw assembly lock knob, rotate 90 degrees so shaft pin is aligned with the deep slot, then release knob. Slide saw to center of rail until lock engages.

To disengage and unlock saw assembly: pull saw assembly lock knob, rotate 90 degrees so shaft pin is aligned with the shallow slot, then release knob.

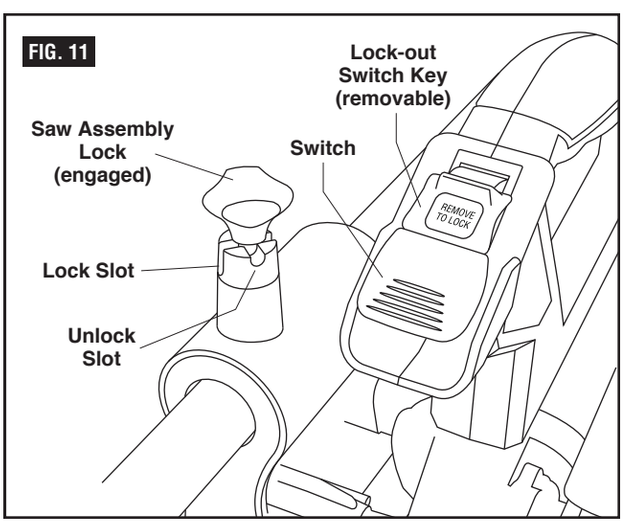

Switch

See Figure 11.

The Switch has a removable lockout switch key to protect against unauthorized use.

1. To turn the tool ON, insert the lockout switch key into the switch housing. As a safety feature, the switch cannot be turned ON without the lockout switch key.
2. Flip the switch upward to the ON position.
3. To turn the tool OFF, move the switch to the down position.
4. To lock the switch in the OFF position, remove the Lockout switch key from the switch. Store the key in a safe place.

Operation

Miter Cutting

A miter cut is made at any miter angle in the range from 0-47°. The miter scale is cast-in on the base for easy reading. Positive detents have been provided for fast and accurate mitering at 0°, 22.5°, and 45°.

Preparing Saw for Miter Cutting

See figure 12.

1. Loosen and remove fence locking knob.
2. Place fence in miter cutting position, by placing the fence's miter pin into the hole located on the table.
3. Replace fence locking knob in threaded hole.
4. Make sure anti-kickback pawls and front hold down bracket are in their fully up position for miter cutting.

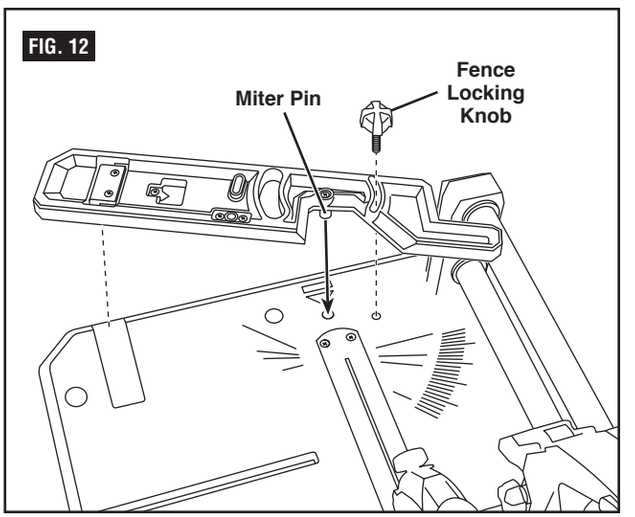

Body and Hand Position

See figure 13.

- Hold work piece firmly to the fence to prevent movement.
- Keep hands away from blade and its cutting path until switch has been turned off and blade has stopped completely.
- Keep feet/knees firmly on the floor and maintain proper balance.
- If following a pencil line, align work piece to kerf of insert plate.
- Before making any cut, with the power off, slide saw toward work piece to preview the blade path.

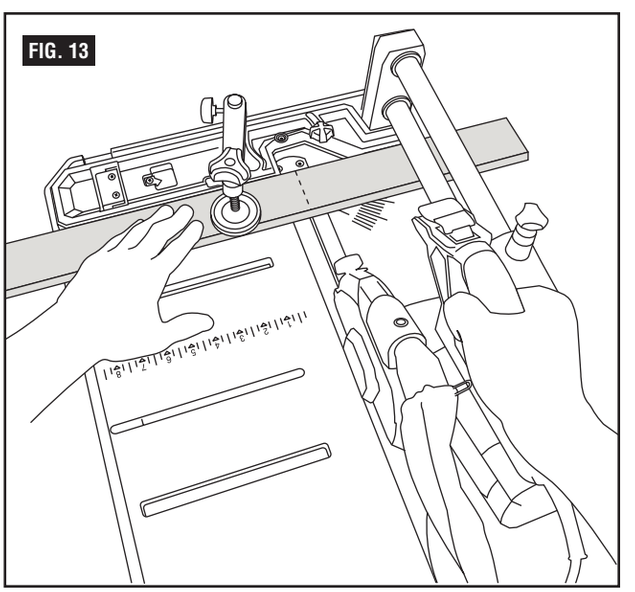

Workpiece Support

See figure 14.

Vice Clamp - This clamp easily secures a workpiece.

1. Insert clamp post into clamp hole.
2. Rotate screw knob of the clamp clockwise to tighten, counter-clockwise to loosen.
3. Slide the saw assembly to check clearance with clamp.

Long Workpiece Support - Support long workpieces to prevent sagging. Use cut 2x4 block to support long workpieces.

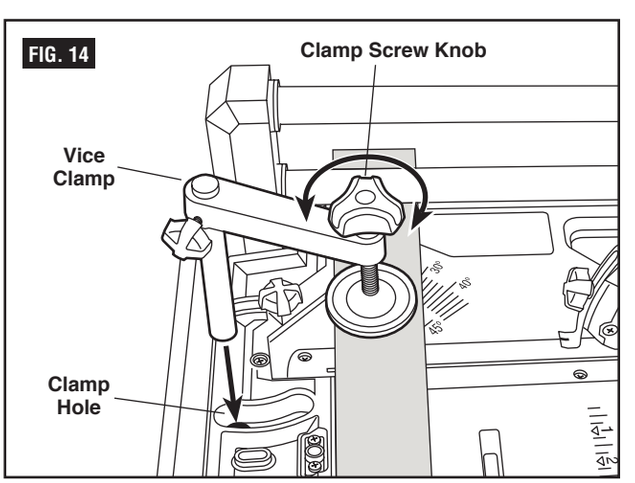

Operation

Making a Miter Cut

See figure 15.

1. Ensure switch is at the “off” position and release the saw assembly lock.
2. Move the fence to the desired angle, using either the detents or the miter scale.
3. Tighten lock knob.
4. Properly position work piece.
5. Make sure workpiece is clamped firmly against the table and the fence. Use clamping position that does not interfere with operation.
6. Before switching on, slide saw assembly to make sure clamp clears guard and saw assembly.
7. Activate the switch.
8. Slide the saw assembly and make your cut.
9. Turn switch OFF and wait until blade comes to a complete stop before returning saw assembly and/or removing the work piece.

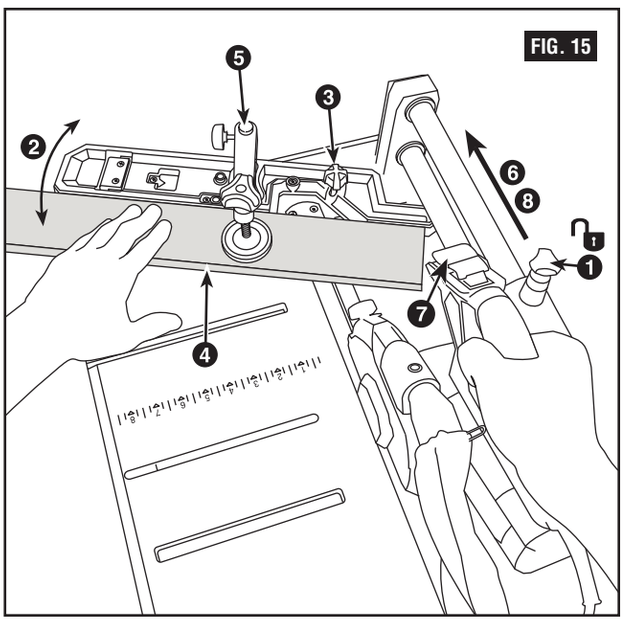

Special Cuts

Cutting Bowed Material

If workpiece is bowed or warped, clamp it with the outside bowed face toward the fence (Figure 16). Always make certain that there is no gap between the workpiece, fence and table along the line of cut. Bent or warped workpieces can twist or rock and may cause binding on the spinning saw blade while cutting.

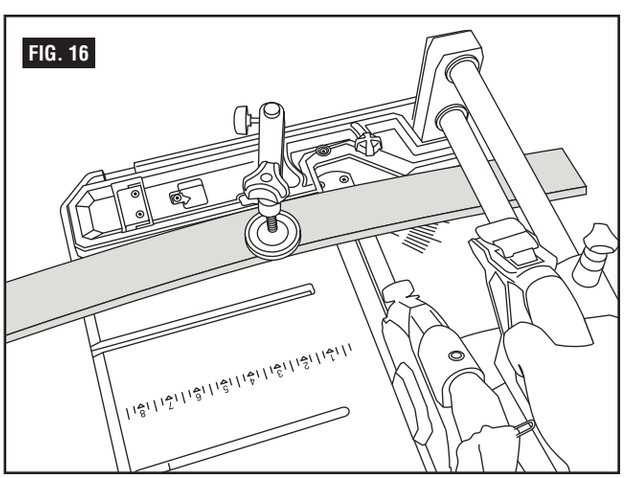

Cutting Round or Irregular Material

For round material such as dowel rods or tubing, always use a clamp or a fixture designed to clamp the workpiece firmly against the fence and table. Rods have a tendency to roll while being cut, causing the blade to “bite” and pull the work with your hand into the blade (Figure 17).

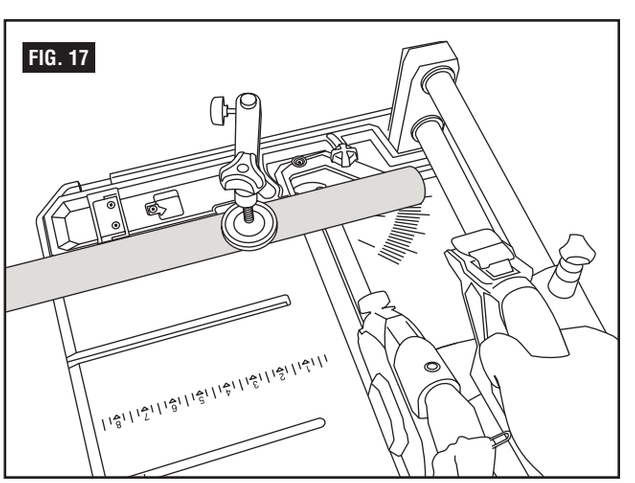

Operation

Rip Cutting

RIPPING is known as cutting a piece of wood with the grain, or lengthwise.

RIPPING is performed using the RIP FENCE together with the PUSH STICK.

A push stick is included with your flooring saw. If your push stick has become lost or damaged, you can make a push stick using a piece of 1 x 2, as shown in figure 18.

Use a push stick whenever the fence is 1-3/4 inches or more from the blade. Use a scrap wood piece when the operation is too narrow (less than 1-3/4") to allow the use of a push stick.

Both a push stick or scrap wood piece should be used in the place of the user's hand to guide the material only between the fence and blade.

When using a push stick or scrap wood piece, the trailing end of the board must be square. A push stick or scrap wood piece against an uneven end could slip off or push the work away from the fence.

For your own safety, always observe the following safety precautions in addition to the safety instructions on Pages 2-6.

Never make these cuts FREEHAND (without using the rip fence because the blade could bind in the cut and cause a KICKBACK.

Always lock the rip fence securely when in use.

Frequently check the action of the ANTIKICKBACK PAWLS by passing the workpiece alongside of the spreader while saw is OFF.

Pull the workpiece TOWARD you. If the PAWLS do not DIG into the workpiece and HOLD it, the anti-kickback pawls must be REPLACED. See "Maintenance" on Page 20.

Do not stand directly in front of the blade in case of a KICKBACK. Stand to either side of the blade.

Keep your hands clear of the blade and out of the path of the blade.

FIG. 18

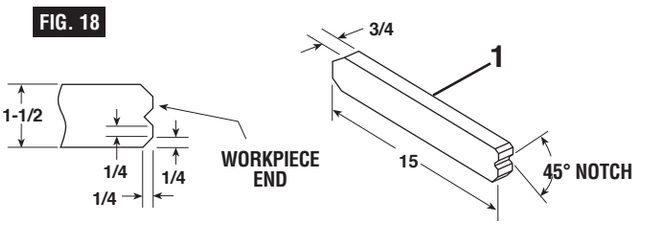

If the blade stalls or stops while cutting, TURN SWITCH OFF before attempting to free the blade.

Do not reach over or behind the blade to pull the workpiece through the cut … to support long or heavy workpieces … to remove small cut-off pieces of material or FOR ANY OTHER REASON.

Do not pick up small pieces of cut-off material from the table. REMOVE them by pushing them OFF the table with a long stick. Otherwise they could be thrown back at you by the front of the blade.

Do not remove small pieces of cut-off material that may become TRAPPED inside the blade guard while the saw is RUNNING. THIS COULD ENDANGER YOUR HANDS or cause a KICKBACK. Turn the saw OFF. After the blade has stopped turning, lift the guard and remove the piece.

If workpiece is warped, place the CONCAVE side DOWN. This will prevent it from rocking while it is being ripped.

Operation

Preparing Saw for Rip Cutting

See figure 19.

1. Position the Saw Assembly on middle of rail.
2. Insert Saw Assembly locking knob into hole on rail and ensure saw assembly is locked into place, see figure 11.
3. Remove fence locking knob and remove fence from miter position.
4. Position threaded piece to right side of table.
5. Position fence on table for ripping.
6. Replace fence locking knob in threaded piece.
7. Adjust front hold down bracket to approximately 1/16" above workpiece.
8. Lower anti-kickback pawls to its lowest position.

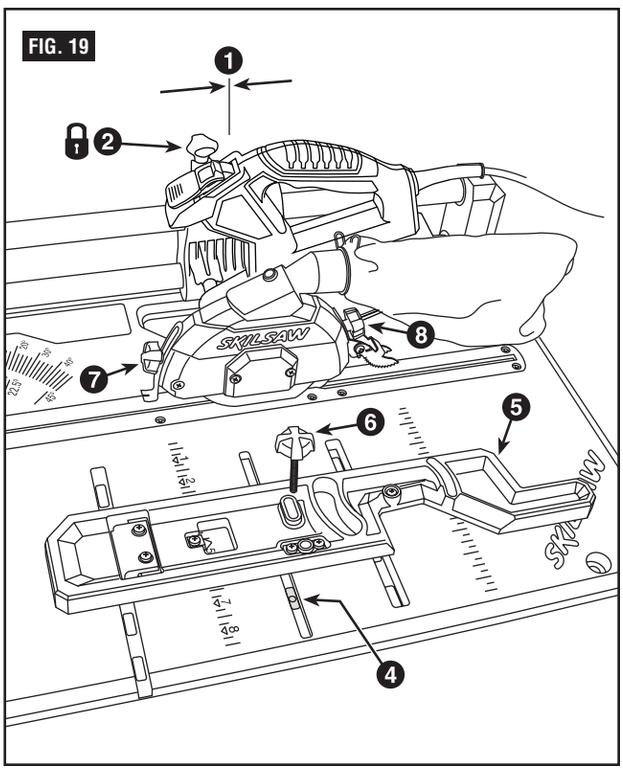

Making a Rip Cut

See figure 20.

1. Ensure switch is at the "off" position and saw assembly is in the locked position.
2. Position the fence to the desired width of rip and lock in place. Before starting to rip, be sure:

   a. Rip Fence is parallel to saw blade.

   b. Riving Knife is properly aligned with saw blade.

   c. Anti-kickback pawls are functioning properly.
3. Turn on the saw and begin to feed the wood onto the blade, making sure that the edge of the wood is against the rip fence.

   Stay to the side of the workpiece as you feed it onto the saw to avoid kickback.

   Use the push stick to complete the cut past the saw blade. The use of a pushstick is essential in helping to ensure safety while using your saw.

   Feed the wood into the blade at a smooth and consistent speed. Keep the wood moving, never stopping as you make the cut, since this could result in an uneven and choppy cut.
4. Turn off the saw after the piece of wood has been cut through. Allow the saw blade to stop completely before removing the pieces of wood.

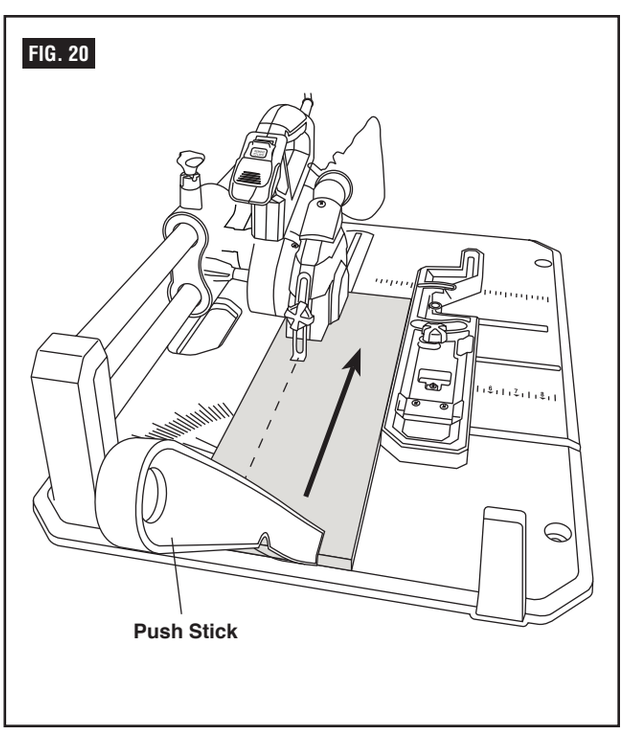

Maintaining Your Flooring Saw

Maintenance

⚠ WARNING For your own safety, turn all switchs "OFF" and remove plug from power source outlet before maintaining or lubricating your saw.

Do not allow sawdust to accumulate inside the saw. Frequently blow out any dust that may accumulate inside the saw cabinet and the motor. Clean your cutting tools with a Gum and Pitch Remover.

The cord and the tool should be wiped with a dry clean cloth to prevent deterioration from oil and grease.

⚠ WARNING Certain cleaning agents and solvents can damage plastic parts. Some of these are: gasoline, carbon tetrachloride, chlorinated cleaning solvents, ammonia and household detergents which contain ammonia. Avoiding use of these and other types of cleaning agents will minimize the possibility of damage.

A coat of automobile-type wax applied to the table will help to keep the surface clean and allow workpieces to slide more freely.

If the power cord is worn or cut, or damaged in any way, have it replaced immediately.

Make sure the teeth of the anti-kickback pawls are always sharp. To sharpen: remove anti-kickback pawls from the saw and sharpen the teeth using a small file (Smooth Cut).

⚠ WARNING All repairs, electrical or mechanical, should be attempted only by trained repairmen. Contact the nearest Factory Service Center or Authorized Service Station or other competent repair service. Use only identical replacement parts, any other may create a hazard.

Accessories

⚠ WARNING Use only recommended accessories. Follow instructions that accompany accessories. Use of improper accessories may cause hazards.

⚠ WARNING Carbide is a very hard but brittle material. Care should be taken to prevent accidental damage. Striking tip can damage carbide. Cutting through nails, wiring, or other hard objects embedded in the workpiece may cause tips to crack or break off. Never use if damage (breakage, cracks, loose tips) is suspected. Never use on metal or masonry.

Troubleshooting

⚠ WARNING **Turn switch "OFF" and always remove plug from the power source before trouble shooting.**

TROUBLE	PROBLEM	REMEDY
Will not start	Power cord is not plugged in.	Plug in.
	Fuse or circuit breaker tripped.	Replace fuse or reset tripped circuit breaker.
	Cord damaged.	Have cord replaced by an Authorized Skil Service Center or Service Station.
	Burned out switch.	Have switch replaced by an Authorized Skil Service Center or Service Station.
Does not come up to speed	Extension cord too light or too long.	Replace with adequate cord.
	Low house voltage.	Contact your electric company.
Excessive vibration	Blade out of balance.	Discard Blade and use different blade, see page 13.
	Saw not mounted securely to stand or workbench.	Tighten all mounting hardware.
	Blade bolt not tight.	See "Blade Removal and Installation", page 13.