Heavy Duty Off Road Winch

MAXIMUM POWER WHEN YOU NEED IT MOST!

Contents

General Safety Precautions
Winch Operation Warnings
Installation
Winch Operation
Maintenance

USE and INSTALLATION INSTRUCTIONS

Vehicle Recovery Electric Winch

A FEW WORDS ABOUT PRODUCT SAFETY

Your Rugged Ridge® vehicle recovery winch is a powerful tool adding considerable utility and enjoyment to your off road vehicle. Keep in mind, however, that your vehicle's weight, the forces required for vehicle recovery and the variety of terrain, grades and cable rigging you might encounter, result in any winching operation having the potential for serious personal injury or damage to your winch or vehicle. Each winch operation may involve different risks making it impractical to provide warnings or information regarding all the risks you may encounter. Fully understand your Rugged Ridge® instructions and practice safe winch operations before attempting an actual vehicle recovery.

To reduce winch-related risks and help you make informed decisions about safety, the accompanying instructions provide certain information in the form of "Warnings", "Cautions" and "Notices". This information alerts you to potential hazards that could hurt you or others.

⚠ NOTICE This is a caution against anything which may cause damage to your winch, the vehicle or its equipment if the caution is ignored. The **Notice** includes information about how you can avoid or reduce those risks.

⚠ WARNING This is a signal telling you that you or others **CAN be KILLED or SERIOUSLY HURT if you don't follow the Warning**. The **Warning** includes information about what you must or must not do in order to reduce the risk of injury to yourself and others.

⚠ CAUTION This is a signal telling you that **you or others CAN be HURT if you don't follow the instruction**. The **Caution** includes information about how you can avoid those risks.

⚠ WARNING

CABLE ENTANGLEMENT/PINCH/CRUSH HAZARDS

Failure to follow these instructions could lead to severe injury or death. Consult further WARNINGS/CAUTIONS and instructions in this use/installation manual.

Due to loads involved, all winching involves significant risks. To minimize risks of injury **Always**:

- Assure winch, mounting, cable and hook are undamaged. Vehicle, slope and conditions should not approach maximum rated pull. Leave a safety margin.
- Use supplied hook strap when spooling in or out (no load). Use gloves and keep fingers and body clear of hook, cable and fairlead during installation and all winch operations.

- Position operator inside vehicle when possible with control switch routed through window rather than door jam. Keep others a safe right angle from cable and vehicle when winching (min. 1.5 times distance of cable). Use greatest cable length possible while keeping at least five turns around spool.
- Fully engage clutch before powering cable in. Do not disengage or adjust clutch while under load. Pull in stages to avoid heat buildup and motor damage.
- Never use vehicle recovery winch for persons or as hoist.

Rugged Ridge XHD Bumper Base with Standard Ends and a 10,500LB Winch

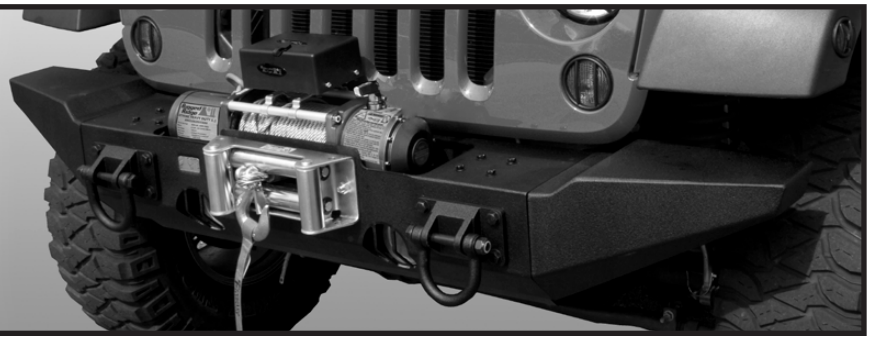

Installing Your Winch

⚠ WARNING Read and understand all instructions and related **Warnings, Cautions and Notices** before attempting to install or use your Rugged Ridge® winch.

⚠ CAUTION Installation requires purchase of a four-point mounting plate or properly equipped bumper unique to your vehicle. Dimensional footprint of your Rugged Ridge® winch is included with parts list at back of these instructions. Verify that the strength of the fasteners, mounting plate and vehicle frame attachment exceeds maximum rated pull of winch. Consult your retail distributor for available mounting plates and bumper options.

1. Align winch so that it sits flush and square on chosen mounting plate. Secure winch to mounting plate using 3/8" x 1-1/4" fasteners and fender washers supplied.
You may find it convenient at this time to feed the cable lead through the roller fairlead hole before you secure your winch plate/bumper. Note: Depending on your bumper, you may want to install your roller fairlead before you secure your winch. This will allow easy access to the roller fairlead back bolt.

⚠ NOTICE Winch must be used with Fairlead to avoid damage to cable, spool and gears. Mount fairlead using supplied fasteners and assure it is centered over spool so cable will wind tightly and evenly in direction of arrow ONLY (see arrow on spool side-plate).

2. Mount solenoid box according to following illustration. Note: control box can be attached either above motor base or on top of spool tie bars. Use brackets and hardware supplied, securing threads with red Loctite®. See following pages.

To mount Solenoid Box over motor:

A. Select Correct Hardware from Hardware Pack

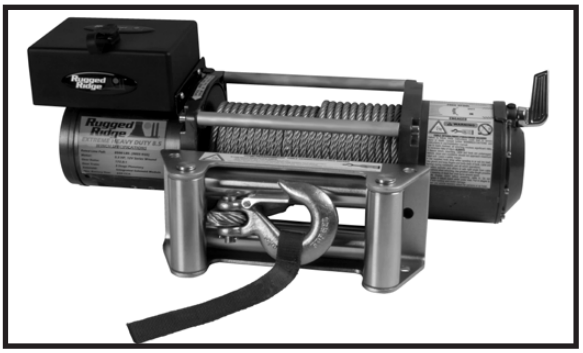

Solenoid Mounted Over Motor

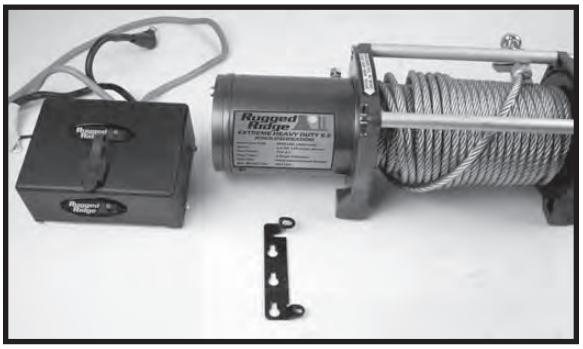

Mounting Bracket for Over Motor Mount

B. Attach black Mounting Bracket to side of spool as shown, using one of the existing socket head screws from rear Tie Bar and socket head screw provided.

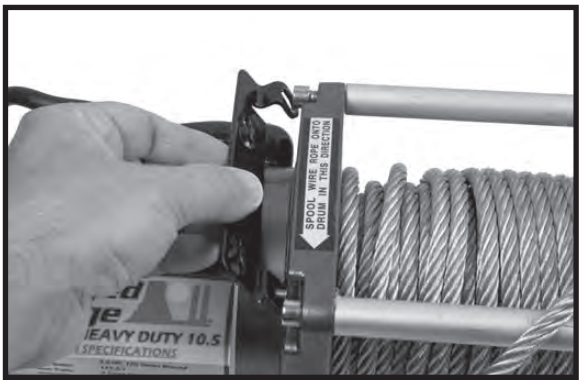

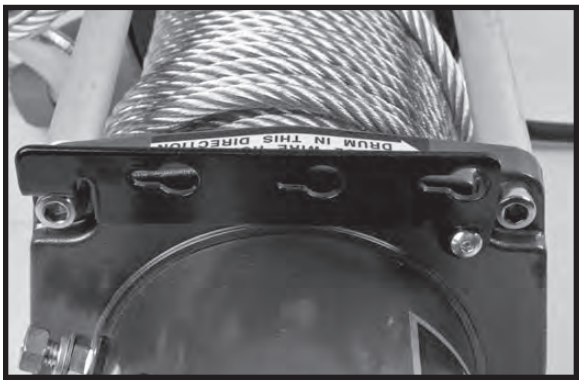

C. Loosen the 2 screws on the right side of Solenoid Box and insert into corresponding holes in Mounting Bracket, sliding them over to smaller portion of mounting bracket holes. Tighten screws.

To mount Solenoid Box over spool:

A. Select the appropriate bracket hardware for your installation. Rugged Ridge® supplies two over spool mounting options. Depending on your bumper, winch plate, or application, you will need to determine which bracket choice to use. The angled bracket allows the solenoid to be angled forward to ensure proper clearance of plug for hand controller relative to bumper overriders or stinger applications.

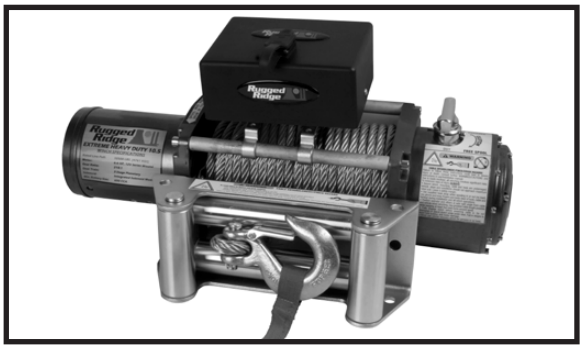

Solenoid Mounted Over Spool

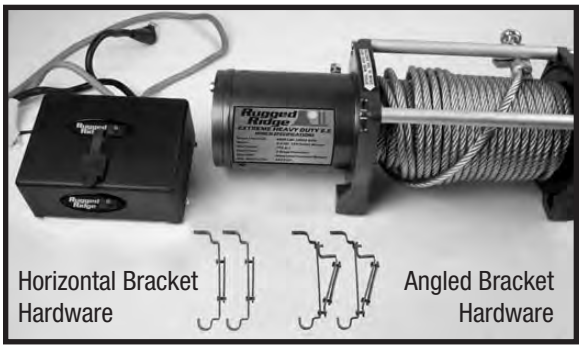

Choose Correct Bracket for Your application

B. Configure & attach brackets as shown for mounting of Solenoid Box over spool.

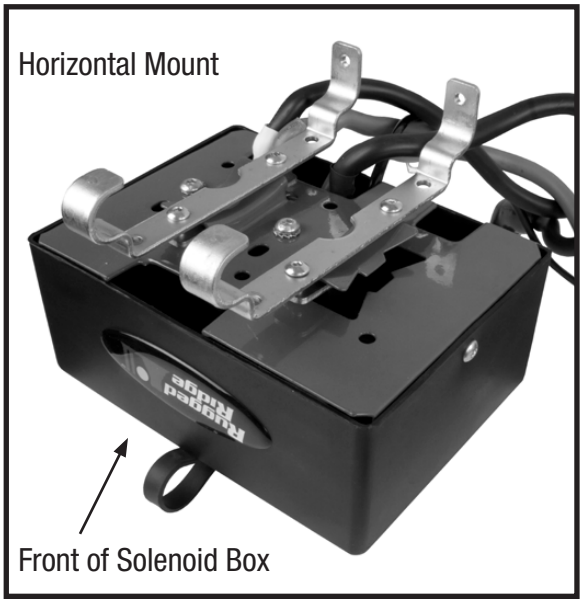

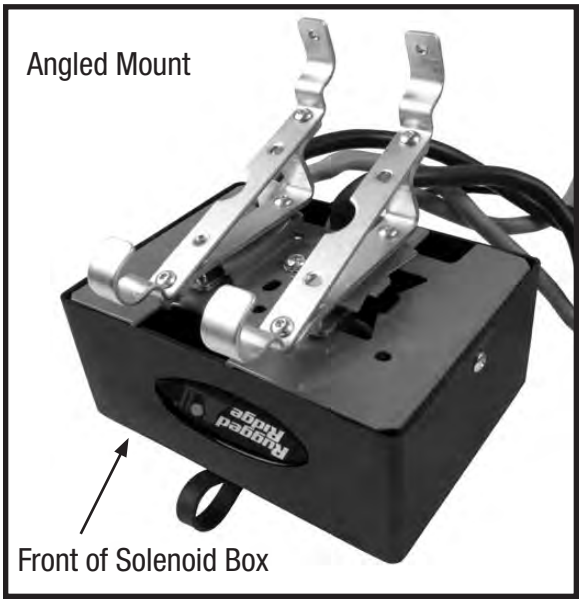

C. Attach Solenoid Box to the tie bars over spool by hooking the Mounting Bracket around front tie bar and securing at the rear with the 2 screws provided, making sure all cables are located between the solenoid box and the tie bar.

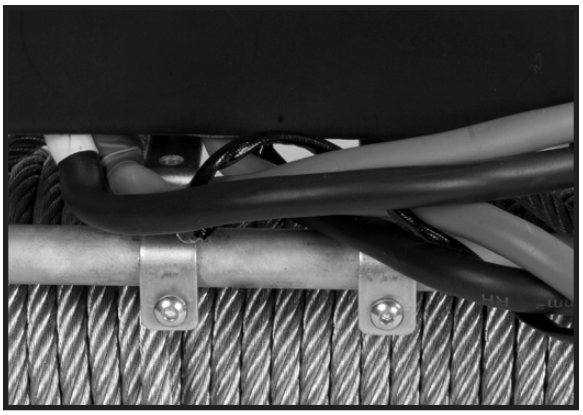

3. Make solenoid box to vehicle battery connections after consulting wiring diagram and instructions.

⚠ WARNING

Chemical and Fire Hazard

To avoid risk of severe injury to eyes and body when working around batteries and electrical components:

- **Always** wear eye protection and remove watches, jewelry.
- **Never** lean over battery or connection being made.
- **Leave remote switch disconnected** to prevent inadvertent spool movement and accident.
- **Never** route electrical cables: across sharp edges or through door jams; through or near moving parts; near parts that become hot.
- If drilling or cable supports required, **verify** area is clear of fuel lines, brake lines and other electrical cables.
- Install insulating boots on all exposed terminal posts and assure wiring/cables remain insulated and protected from heat, vibration and wear.

Solenoid Box to Winch Motor Connections

A. Connect short red cable (B) from control to red terminal (B) of motor.

B. Connect black cable with yellow jacket (C) to yellow terminal (C) of motor.

C. Connect short black cable with black jacket (D) to black terminal (D) of motor.

D. Connect thin black cable (E) to bottom terminal (A) of motor.

Winch Motor to Battery Connections

A. Ground motor by connecting long/thick **black** cable to bottom terminal (-) of motor and other terminal to **Negative (-)** post of battery.

B. Power motor by connecting long/thick **red** cable **(+)** from control box to **Positive** terminal **(+)** of battery.

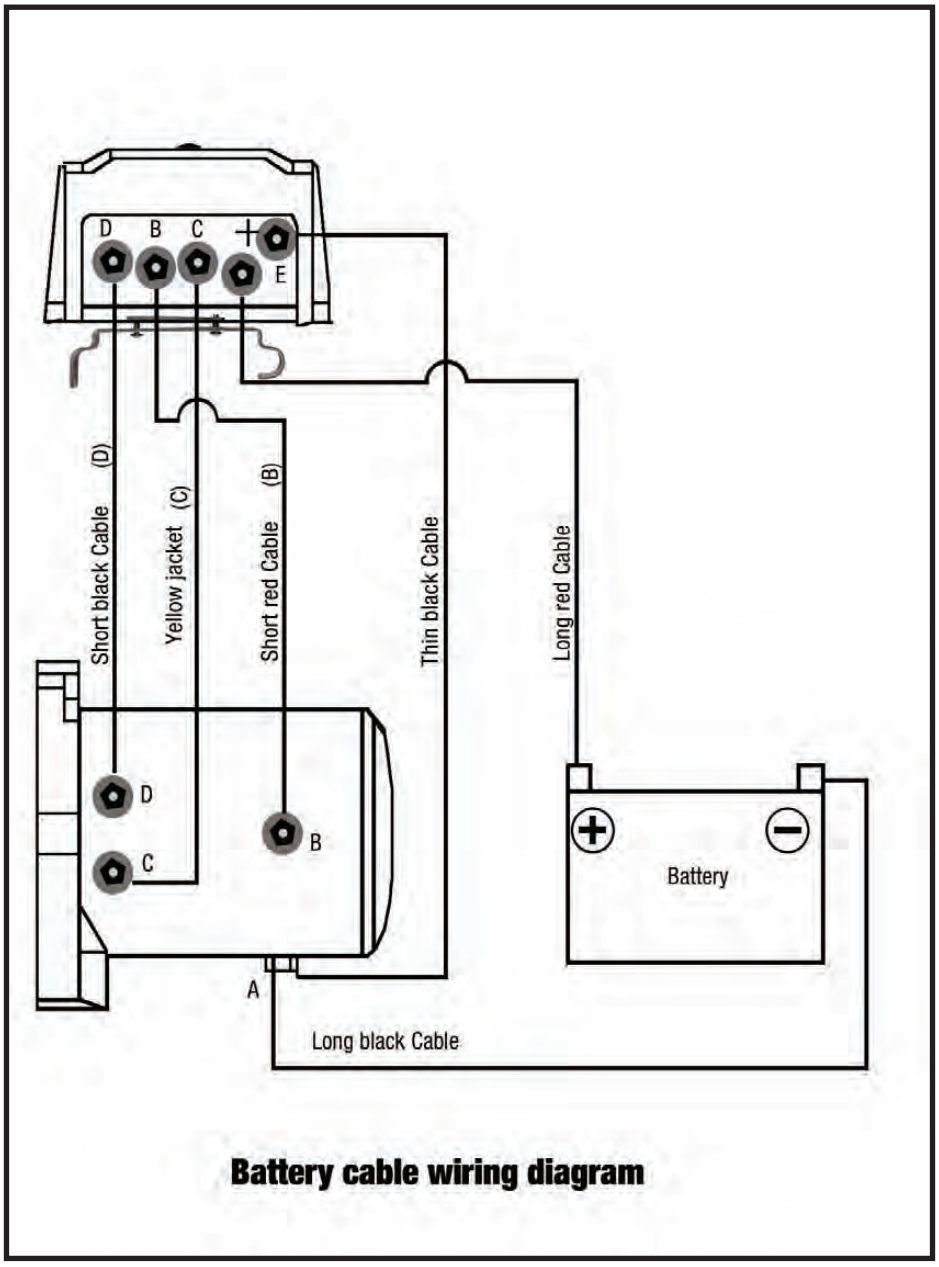

Battery cable wiring diagram

NOTICE Rating and condition of vehicle battery will affect winch performance. Minimum required battery is 650 CCA, fully charged.

CAUTION Corrosion on electrical connections and battery terminals will reduce power and winch performance. Keep battery charged, all connections clean and sealed with silicone-based sealer.

⚠ CAUTION Cable or synthetic rope must be unspooled, stretched and respooled before first use. (See Installation instructions and use warnings below). Cable must be re-wound in direction of arrow for spool brake to function (see arrow on spool side-plate).

NEVER MOVE CLUTCH WHEN CABLE IS UNDER LOAD OR SPOOL MOVING.

⚠ WARNING Use supplied hook strap when spooling in or out (no load). Use gloves and keep fingers and body clear of hook, cable and fairlead during installation and all winch operations.

4. Cable or synthetic rope must be stretched and spooled under tension to prevent over-wraps and damage. For initial spooling, disengage clutch and using gloves, keep tension on cable while having assistant evenly wind the first five wraps for cable, or a full layer for synthetic rope, by hand rotating spool in direction of arrow (see spool side plate).

5. Next, secure hook to suitable anchor, connect power switch, engage clutch and slowly power spool while maintaining tension so that cable spools tightly and evenly. Rolling load of vehicle should provide proper initial tension (500 lbs./230 kg. min.) while providing opportunity to practice winch operation and safety procedures. Stop spool when hook is 6 feet/2 meters from fairlead. Attach and secure hook to vehicle frame. Slowly take up any slack.

⚠ WARNING To avoid unintentional starting when winch is not in use: (a) remove & secure remote switch & (b) keep clutch disengaged.

Clutch and Control Handle Operation

A. Clutch Operation

1. Free spool by disengaging clutch. Move clutch lever clockwise to the “OUT” position. Cable may now be pulled off spool using supplied hook strap. DO NOT FORCE CLUTCH HANDLE. Use control handle to rotate drum, aligning gear to free spool.

2. To power spool fully engage clutch. Move clutch lever counterclockwise to the “IN” position. Winch is now ready for vehicle recovery using power switch. Avoid powering spool in reverse as this increases wear on spool brake. Return clutch to “Out” position after completing pull and assuring vehicle is stable.

B. Power Switch Operation

Keep control handle in secure location, attaching before and detaching after each winch operation.

⚠ NOTICE Avoid internal damage by breaking each vehicle recovery into segments and allowing motor to cool. Do not continue power to stalled motor.

Planning and Use of Your Winch

⚠ WARNING Read and understand all instructions and related **Warnings, Cautions and Notices** before attempting to install or use your Rugged Ridge® winch.

1. Ensure vehicle, slope and conditions do not approach maximum rated pull. Leave a safety margin. Winch provides greater mechanical advantage when cable is fully extended. Plan pull using as much cable as practical. Double line using snatch block is preferred.

⚠ WARNING **Secure cable attachment requires at least five (5) wraps on Spool. Do not extend red painted cable. Secure synthetic rope attachment requires a full layer on the spool. DO NOT EXCEED RATED PULL LESS SAFETY MARGIN.**

2. Plan and center anchor and snatch blocks or rigging so cable pulls straight to winch. Confirm anchor point will support load with adequate safety margin. Where anchor is tree use trunk protector and shackle rated at least double maximum winch pull. Where anchor is vehicle, (see below) fully engage cable hook through towing eye or shackle rated at least double maximum winch pull. Attach to vehicle frame ***not*** bumper or winch mount.

⚠ CAUTION Vehicle to Vehicle winching not recommended as it may exceed capacity of winch, mounting or cable. Do not drive vehicle while winching. Avoid slack cable or shock loads from rolling vehicle to reduce risk of failure. Maintain steady tension through winch and block vehicle at safe intervals. Winch not intended to tow vehicles or secure loads. Never use recovery strap as part of winch operation. Stretch/stored energy in recovery strap may create shock load.

3. Extend cable manually by disengaging clutch to free spool. Confirm cable hook fully engages anchor, strap or shackle. Do not fix hook back around cable to avoid damage. Confirm power switch on Control Handle is "OFF" and attach remote. Fully engage clutch before powering spool. Keep vehicle motor running to avoid battery drain.

⚠ WARNING

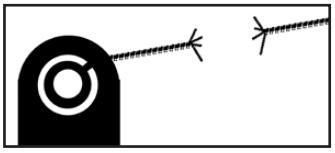

- **Always keep hands, body and clothing clear of cable, hook and fairlead during operation and spooling.**
- Reduce risk of cable-related injury by clearing persons and establishing safe zone equal to at least 1.5 times length of cable. Keep operator away from cable and line of pull. Operate from inside vehicle if possible. If not, operator should be at right angle to cable and protected by vehicle where possible. To avoid electrical short, never route remote switch through vehicle door jam. Confirm anyone assisting understands recovery plan and safety precautions.
- **Always wear gloves and use supplied hook strap when handling cable**; never touch cable under tension. Never work under or over cable under tension. **Use Rugged Ridge® dampener or substitute (heavy blanket) over cable mid-point to dampen energy in event cable fails.** Slack cable before moving blanket or tree limb.

4. Plan your pull, recognizing recovery winches are not intended for continuous duty. Heavy load and slow line speed indicate high amperage draw causing heat build-up in motor. ⚠ NOTICE Avoid damaging motor by adjusting to shorter pull cycles and longer cool-down periods under heavy load. Do not continue power to stalling motor.

5. Begin pull by gradually taking tension on cable to avoid shock loads. As you power in, cable must wind tightly and evenly on drum to prevent over-wraps and cable damage. Avoid side-pull on spool or cable stacking against spool side plates.

⚠ WARNING

CABLE ENTANGLEMENT HAZARD

Cable must rewind in direction of arrow indicated on spool housing for spool brake to function. If cable stacks or does not spool properly, block or secure vehicle and slowly power-out problem section. Keeping gloved hands clear of fairlead and spool, reposition cable to opposite side of spool. Stand clear of winch while gradually regaining tension on cable.

6. Complete pull by securing vehicle in gear with parking brake on. Slowly power cable out to remove tension before securing rigging.

⚠ NOTICE **Cable must be stored evenly and tightly on spool to prevent damage.** Using gloves, grasp cable in sections at least 6 feet (2 meters) from fairlead. Slowly power cable onto spool while maintaining light tension to produce tight, even wraps.

⚠ WARNING

- **Always keep hands, body and clothing clear of cable, hook and fairlead during operation and spooling.**
- **Wire spurs and strands from cable can cause serious injury. Always use gloves and do not allow cable to slip through hands. Maintain at least 6 feet (2 meters) between your position with cable and fairlead. For control and safety, keep power switch with person holding cable strap.**
- **Always use hook strap when hook is within 6 feet (2 meters) of fairlead. Secure hook to vehicle frame or tow eye and slowly power spool to complete storing cable under light tension. Remove and secure power switch.**

Maintenance

⚠ WARNING Do not use winch if damaged, submerged in water, in presence of flammable vapors or if cable is frayed or kinked. INSPECT BEFORE EACH USE.

1. Using gloves and observing all **WARNINGS** and **CAUTIONS** described above, inspect cable and hook on regular basis and replace as necessary with cable or hook of equal strength. Cable clamp on spool must be secured with red Loctite® when replacing cable. Consult synthetic rope manufacturers load ratings, recommendations and warnings if replacing cable with hi-strength synthetic rope.

2. Using safety glasses, inspect winch, mounting plate and attachment hardware for damage or wear. Carefully trace electrical connections, from winch to control and back to battery, assuring connections are secure and protected, cables are undamaged and battery remains fully charged (minimum 650 CCA, fully charged). Replace or repair as necessary.

3. Winch is lubricated at factory and should not require additional lubrication. As electrical component, winch is not intended to be submerged in water. If submerged, have winch serviced immediately to prevent damage and corrosion. Spare and replacement parts for your Rugged Ridge® vehicle recovery winch are available from your retail distributor. See parts list attached.

⚠ WARNING

Your safety and the safety of other motorists is very important. Your Jeep® is an off road capable vehicle that readily lends itself to restoration and customizing. As the owner of a modified suspension vehicle, you are the person choosing the combination of suspension, wheels, tires, drive train and accessories that best fit your intended use. Likewise, you are the person responsible for the safety and legality of the vehicle you modify. In modifying your vehicle's suspension, balance your off-road capabilities against how the vehicle may actually be used off-road and on-road.
It is not practical or possible to warn about all hazards associated with your Jeep® restoration or modifying your suspension for improved off road capabilities. Start by familiarizing yourself with all vehicle manufacturers' instructions and warnings and the instructions and warnings accompanying your aftermarket product. Follow recommended maintenance procedures and routinely inspect your vehicle components for unusual wear or off-road damage.
Restoration parts are direct replacements of original components and are not designed or warranted as meeting current safety standards (including FMVSS).
Always wear seat belts and/or appropriate off-road restraints, reduce your speed, tread lightly© and safely enjoy your off-road vehicle.

8,500LB SOLENOID ASSEMBLY PARTS LIST

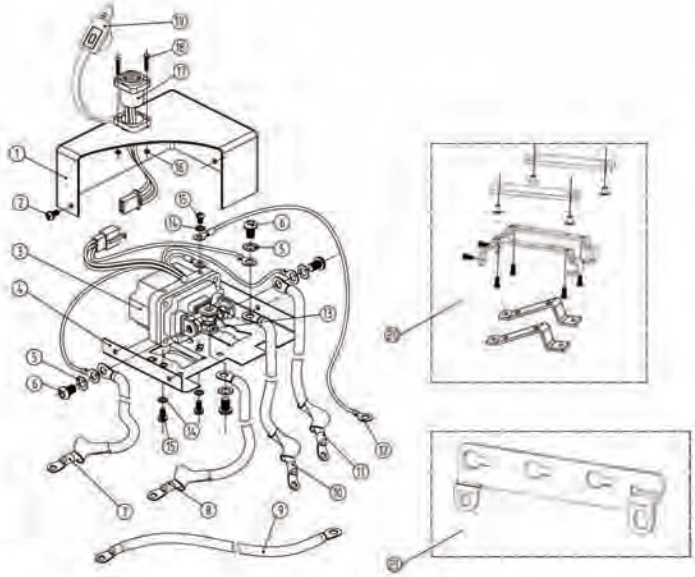

Item No.	Part No.	Description	Qty
1		Control box cover	1
2		M5x12 bolt	9
3		ISM(Integrated solenoid module),12V	1
4		Control box plate	1
5		M8 washer	4
6		M8x12 bolt	4
7		Short black cable with yellow sleeve	1
8		Short red cable	1
9		Long black cable	1
10		Long red cable	1
11		Short black cable with black sleeve	1
12		Green cable with black sleeve(0.75mm^{2}x0.45;Earth)	1
13		M8 nut	4
14		M6 washer	3
15		M6 nut	3
16		M3 nut	2
17		Socket	1
18		Socket fix screw	2
19		Socket Cover	1
20		Control box mount bracket(solution1)	1
21		Control box mount bracket(solution2)	1

8,500LB FEATURES & SPECIFICATIONS

Rated Line Pull	8500LB (3852kg) Single-line
Motor	5.5hp 12V Series wound
Control	Remote switch, 12' lead (3.7m)
Solenoid style	Integrated Solenoid Module (ISM)
Gear Train	3-Stage Planetary
Gear reduction ratio	172.8:1
Clutch	Shift Pin Ring Gear
Braking	Automatic In-The-Drum
Drum size	Diameter 2.52" (64mm) Length 8.82" (224mm)
Cable	94"21/64" diameter (28.5m,8.2mm diameter)
Fairlead	4-way roller fairlead
Remote Control	Included
Recommended Battery	650CCA minimum for winching
Battery Leads	25mm 72"(1.83m)
Finish	Dark Gray
Weight	80.5lbs(36.5kg)
Overall dimensions	(LxWxH)22"x6.3"x8.1"(557x160x205mm)
Mounting Bolt Pattern	10.00 +/- 0.015Nx4.50 +/- 0.010IN(254x114.3mm)

8,500LB LINE SPEED & AMP DRAW-FIRST LAYER

Line Pull	Lbs	NO	2000	4000	6000	8000	8500
	Kgs	LOAD	910	1814	2720	3630	3850
Line speed	Ft/min	37.2	18	13.1	10.2	8.2	7.2
	M/min	11.4	5.5	4	3.1	2.5	2.2
Motor Current	amps	70	190	260	335	410	425

8,500LB LINE PULL & CABLE CAPACITY

Layer of cable		1	2	3	4
Rated line pull per layer	Lbs	8500	7432	6730	6245
	Kgs	3850	3370	3050	2830
Cumulative cable capacity	Ft	16	42	72	94
	m	5	12	21	28

DIMENSIONS

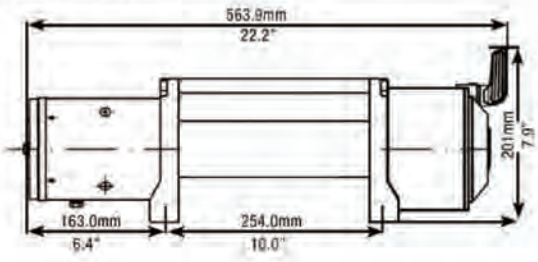

MOUNTING BOLT PATTERN

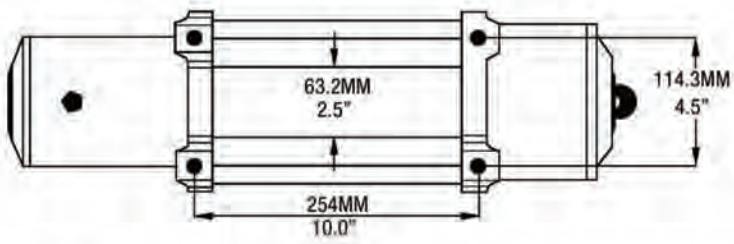

8,500LB PARTS LIST

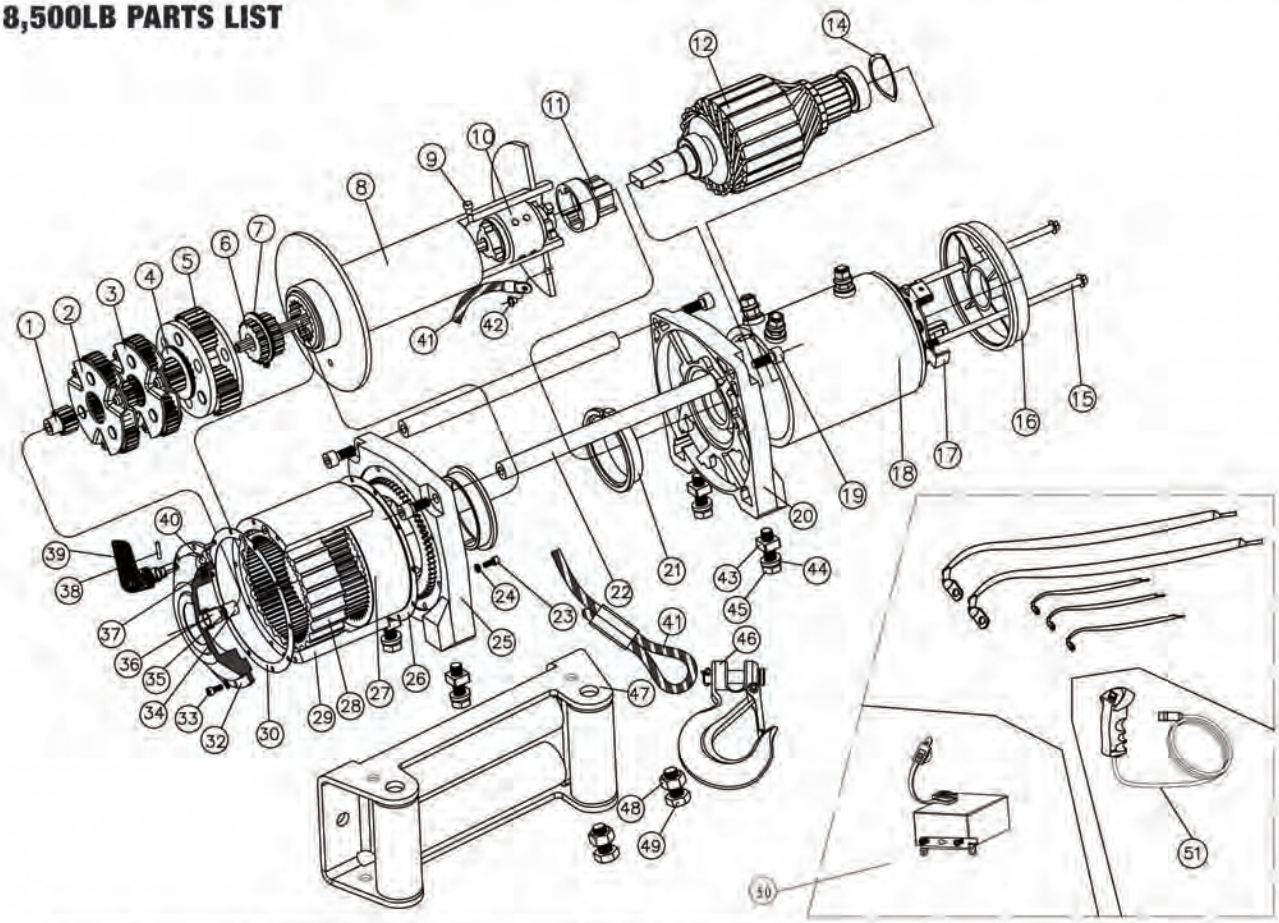

ITEM #	PART #	DESCRIPTION	QTY
1		Sun Gear-Input	1
2		Gear Carrier Ass'y Input	1
3		Gear Carrier Ass'y-Intermediate	1
4		Cushion 1.2mm Thickness	2
5		Gear Carrier Ass'y-Output	1
6		Outer Spline	1
7		Retaining Ring	1
8		Drum Ass'y	1
9		Bolt For Brake M8x12	1
10	15103.20	Brake Ass'y	1
11		Coupling Joint	1
12		Rotor	2
14		Washer Ø18	2
15		Long Bolt M6 x 156	1
16		Motor End Cover	1
17	15103.21	Carbon Ass'y	1
18		Stator	1
19		Link Screw M8 x 25	4
20	15103.22	Motor Base	1
21		Nylon Bearing	2
22		Tie Bar	2
23		Bolt M4 x 16	10
24		Lock Washer Ø4	20
25	15103.23	Gear Box Base	1
26		Gasket 9500	2

ITEM #	PART #	DESCRIPTION	QTY
27		Inner Gear	1
28		Clutch Gear	1
29		Gear Housing	1
32		Gear Box End Cover	1
33		Bolt M4 x 10	10
34		Bearing	1
35		Anti Friction Washer	2
36		Shaft Sleeve	1
37		Clutch Spring	1
38		Clutch pin	1
39	15103.24	Clutch Handle	1
40		Steel Ball	1
41	15103.01	Wire Rope/8500 - 3/8" x 94'	1
42		Bolt for Wire Rope Fixing	1
43		Mounting Nut	4
44		Lockwasher Ø10	4
45		Mounting Bolt	4
46		Hook (size 3/8")	1
47		Roller Fairlead	1
48		Fairlead Fixing Nut	2
49		Fairlead Fixing Bolt	2
50	15103.11	Solenoid Box Ass'y	1
	15103.10	Winch Solenoid	
	15103.12	Winch Solenoid Box Plug	
	15103.26	Solenoid Mounting Brackets with Hardware	
51	15103.05	Handheld Control	1
	15102.25	Winch & Roller Fairlead Mounting Hardware	

10.500LB SOLENOID ASSEMBLY PARTS LIST

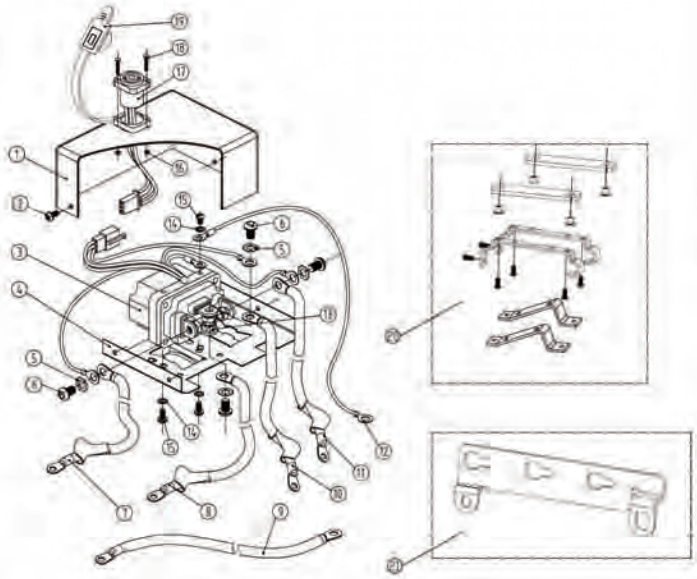

Item No.	Part No.	Description	Qty
1		Control box cover	1
2		M5x12 bolt	9
3		ISM(Integrated solenoid module),12V	1
4		Control box plate	1
5		M8 washer	4
6		M8x12 bolt	4
7		Short black cable with yellow sleeve	1
8		Short red cable	1
9		Long black cable	1
10		Long red cable	1
11		Short black cable with black sleeve	1
12		Green cable with black sleeve($0.75mm^2$x0.45;Earth)	1
13		M8 nut	4
14		M6 washer	3
15		M6 nut	3
16		M3 nut	2
17		Socket	1
18		Socket fix screw	2
19		Socket Cover	1
20		Control box mount bracket(solution1)	1
21		Control box mount bracket(solution2)	1

10,500LB FEATURES & SPECIFICATIONS

Rated Line Pull	10,500LB (4773kg) Single-line
Motor	6.6hp 12V Series wound
Control	Remote switch, 12' lead (3.7m)
Solenoid style	Integrated Solenoid Module (ISM)
Gear Train	3-Stage Planetary
Gear reduction ratio	218.1
Clutch	Sliding Ring Gear
Braking	Automatic In-The-Drum
Drum size	Diameter 2.52" (64mm) Length 8.82" (224mm)
Cable	94' 23/64" diameter (28.5m 9.2mm diameter)
Fairlead	4-way roller fairlead
Remote Control	Included
Recommended Battery	650CCA minimum for winching
Battery Leads	25mm 72"(1.83m)
Finish	Dark Gray
Weight	84lbs (38kg)
Overall dimensions	(LxWxH)21.15" x 6.3" x 8.6" (537 x 160 x 218mm)
Mounting Bolt Pattern	10.00 +/- 0.015" x 4.50" +/- 0.010" (254 x 114.3mm)

10,500LB LINE SPEED & AMP DRAW-FIRST LAYER

Line Pull	Lbs	NO	2000	6000	6000	8000	10000
	Kgs	LOAD	910	2720	2720	3630	4532
Line speed	Ft/min	29.5	14.4	9.85	9.85	8.7	7.2
	M/min	9	4.4	3	3	2.65	2.2
Motor Current	amps	70	170	310	310	380	425

10,500LB LINE PULL & CABLE CAPACITY

Layer of cable		1	2	3	4
Rated line pull per layer	Lbs	10000	8633	7716	7089
	Kgs	4532	3913	3497	3213
Cumulative cable capacity	Ft	16	42	72	94
	m	5	12	21	28

DIMENSIONS

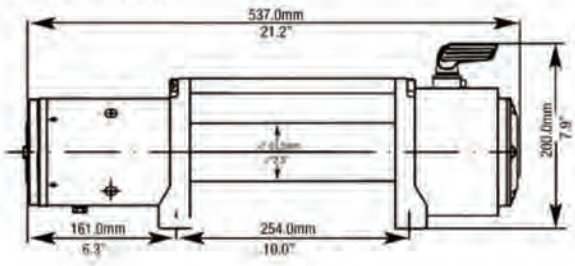

MOUNTING BOLT PATTERN

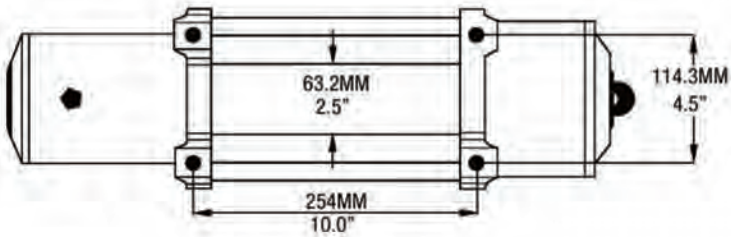

10,500LB PARTS LIST

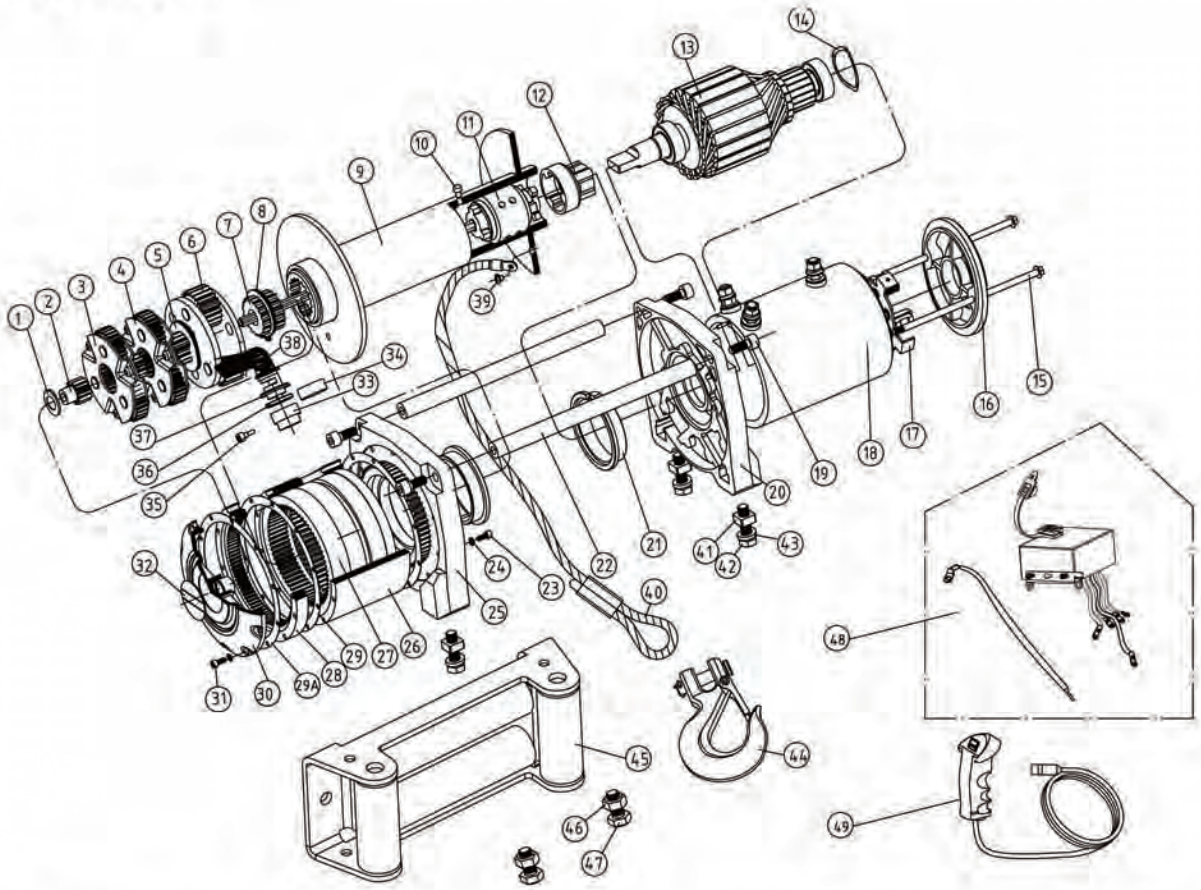

ITEM NO.	PART NO.	DESCRIPTION	QTY	ITEM NO.	PART NO.	DESCRIPTION	QTY
1		Washer	2	27		Inner Gear	1
2		Sun Gear - Input	1	28		Inner Gear	1
3		Gear Carrier Ass'y - Input	1	29		Gasket 9500	1
4		Gear Carrier Ass'y - Intermediate	1	29A		Gasket 8500	2
5		Cushion 1.2mm Thickness	2	30		Gear Box Cover	1
6		Gear Carrier Ass'y - Output	1	31		Bolt for Wire Rope Fixing	16
7		Outer Spline	1	32		ID Badge	1
8		Retaining Ring	1	33		Clutch Handle Base	1
9		Drum Ass'y	1	34		Bolt for Clutch Handle	1
10		Bolt for Brake M8 X 12	1	35		Washer	1
11	15103.20	Brake Ass'y	1	36		Clutch Handle Cover	1
12		Coupling Joint	1	37	15103.24	Clutch Handle	1
13		Rotor	1	39		M6 X 8	1
14		Washer Ø18	2	40	15103.02	Wire Rope/10500 - 23/64" x 94'	1
15		Long Bolt M6 x 156	1	41		Spring Washer	4
16		Motor End Cover	1	42		Lockwasher Ø10	4
17	15103.21	Carbon Ass'y	1	43		Mounting Bolt	4
18		Stator	1	44		Hook (size 3/8")	1
19		Link Screw M8 x 25	4	45		Roller Fairlead	1
20	15103.22	Motor Base	1	46		Fairlead Fixing Nut	2
21		Nylon Bearing	2	47		Fairlead Fixing Bolt	2
22		Tie Bar	2	48	15103.11	Solenoid Box Ass'y	1
23		Bolt M4 x 16	9		15103.10	Winch Solenoid	
24		Lock Washer Ø4	25		15103.12	Winch Solenoid Box Plug	
25	15103.23	Gear Box Base	1		15103.26	Solenoid Mounting Brackets with Hardware	
26		Gear Housing	1	49	15103.05	Handheld Control	1
					15103.25	Winch & Roller Fairlead Mounting Hardware	