AIR BYPASS VALVE

INSTALLATION INSTRUCTIONS

PART NUMBERS:

20-400S, 20-401S, 20-402S & 20-403s

Read and understand these instructions <u>BEFORE</u> attempting to install this product. Failure to follow installation instructions and not using the provided hardware may damage the intake tube, throttle body and engine.

The AEM air bypass valve can only be used with ARB-Exempted Advanced Engine Management, INC cold air systems. Only applications listed under E.O. # D-392-25 have exemption.

The AEM air bypass valve cannot be used on forced induction applications.

The AEM® air bypass valve is ONLY compatible with genuine AEM® intake systems. You must ensure that the valve is installed in the correct location for your vehicle and that the rubber soft mount that was originally supplied with the AEM® intake is properly installed. The structural integrity of the valve depends on correct installation. Use of the AEM air bypass valve in conjunction with any other system is neither recommended nor warranted and may result in, among other things, malfunction of the AEM air bypass valve.

The AEM® air bypass valve is **NOT TO BE USED ON TURBO or SUPERCHARGED** engines. Use of the AEM bypass valve on engines with these modifications, will void any warranty of the valve and reduce the performance of the vehicle.

The AEM® air bypass valve can be used in nitrous applications where the fogger nozzle is installed in the intake pipe only when the nozzle is installed in between the bypass valve and the throttle body.

AEM® has developed an air bypass valve for its cold air induction systems. This valve installs on the intake pipe along the same axis as the throttle body and eliminates the chance of water ingestion should the filter element become wet from rain, hail, sleet, snow, flood or any other scenario where the filter element could encounter or become completely submerged in water. The air bypass valve is designed to open when the filter element becomes completely submerged in water thereby preventing terminal engine damage. The air bypass valve is available in three sizes to fit every AEM® intake system diameter. It's crafted from mineral reinforced polycarbonate, which has outstanding corrosion resistance properties. The AEM® air bypass valve is manufactured and assembled in the U.S.A. and is patent pending.

There is a foam filter around the bypass valve. **Do not remove it.** This filter is required for proper operation of the valve while it is active.

The foam spring inside the diaphragm provides the proper tension for the valve diaphragm. **Do not remove this foam spring.**

Read and understand these instructions BEFORE attempting to install this product.

If you are installing a cold air system (CAS) and an air bypass valve onto a vehicle that has never had a CAS installed on it before then DO NOT cut the inlet pipe until a mounting location for the air bypass valve has been determined. This requires that the CAS be installed first in order to determine a good mounting location for the air bypass valve.

1) Getting started

a) Make sure vehicle is parked on a level surface.
b) Set parking brake.
c) Disconnect negative battery terminal.
d) If engine has run within the past two hours let it cool down.
e) Jack up vehicle and support it with properly rated jack stands.
f) Determine a good mounting location for the air bypass valve.
   i) Do not mount the bypass valve between the throttle body and pipe because the vehicle performance will suffer. Additionally, the valve will break at the seam due to high shear forces from engine rocking.
   ii) On engines that have an air flow meter, do **NOT** install the bypass valve between the throttle body and the air flow meter.
   iii) Try to position the air bypass valve as high as possible on the pipe.
   iv) Position the air bypass valve on a straight section of the inlet pipe.

v) Make sure that there is at least 1" of clearance around the circumference of the air bypass valve. For $2^{1/2}$" diameter inlet pipes there should be at least $2^{1/4}$" of clearance from the outside edge of the pipe. For $2^{3/4}$" diameter inlet pipes there should be at least $2^{1/8}$" of clearance from the outside edge of the pipe. For 3" diameter inlet pipes there should be at least 2" of clearance from the outside edge of the pipe.

vi) On the later Neon engines with an AEM® cold air intake there is a small section of straight tubing after the throttle body **DO NOT** install the bypass valve in this section of piping.

g) Cut the template from the end of these instructions and wrap it around the pipe at the point where the air bypass valve is going to be located. Use clear tape to hold the paper on the pipe. The template is used as a guide for when you cut the pipe.

2) Removing the inlet pipe

a) Remove the inner splashguards then remove the air filter.
b) Remove the nut and washer from the rubber mount if your vehicle is so equipped.
c) Loosen and remove the hose clamps at the throttle body.
d) Remove the inlet pipe.

3) Cutting the inlet pipe

NOTE: If you do not have the experience or correct tools to complete this step of the installation, then please refer this step to a qualified professional with the proper equipment.

a) Cut the inlet pipe on both sides of the template that is wrapped around the pipe. This task is most easily completed with a band saw, but a hacksaw or tube cutter will also work. Whichever method is used, be sure that the appropriate aluminum cutting blade is installed on the cutting tool and that proper safety procedures are followed.
b) Deburr the ends of the pipe. Use a deburring knife or a round file. Be sure not to leave any sharp edges or loose pieces of aluminum.
c) Clean the inside of the pipe by using a rag or paper towel. Solvent may be used but do not allow the solvent to come in contact with the painted surface on the outside of the pipe. Many solvents will strip or blister the paint. Be sure that the pipe is clean. Any material that is left in the pipe will end up inside the engine and may damage the engine.

4) Installing the air bypass valve

a) Lubricate the inside surface of the valve with a small amount of soapy water or lubricant.
b) Slide the valve over one end of the inlet pipe.
   i) **NOTE: Inside the valve there is lip on the rubber insert. Make sure that you DO NOT install the pipe further than this lip. The end of the pipe should just contact the edge of the lip.**
c) Install and tighten one hose clamp.
   i) **Caution: Do not over-tighten the hose clamp. Over-tightening may lead to a failure of the valve. Just tighten enough to prevent movement.**
d) Insert the other half of the inlet pipe into the valve. Make sure that you DO NOT install the pipe further than the lip inside the valve. The end of the pipe should just contact the edge of the lip.
e) Install and tighten the other hose clamp onto the valve.
   i) **Caution: Do not over-tighten the hose clamp. Over-tightening may lead to a failure of the valve. Just tighten enough to prevent movement.**
f) Push in on each diaphragm flap of the valve. Make sure that the flap does not contact the inlet pipe or the black rubber insert inside the valve. If any of the flaps contact any part of the pipe or rubber insert then readjust the valve as necessary to prevent contact.

5) Reinstalling the inlet pipe

a) Reinstall the inlet pipe into the vehicle.
b) If necessary readjust the rotation of the pipe to make the pipe fit correctly.
c) Install the nut and washer over the support tab and onto the rubber mount. Refer to the picture below for correct installation.
d) Install the air filter.
e) Reinstall the plastic splashguards. Plastic splashguards are vital to the operation of the air bypass valve, and must be installed on the vehicle to help prevent water ingestion.
f) Tighten the hose clamps at the throttle body.
g) Make sure that the pipe does not contact the body or any other components. Readjust the pipe if necessary.

Diagram showing correct installation of soft mount assembly:

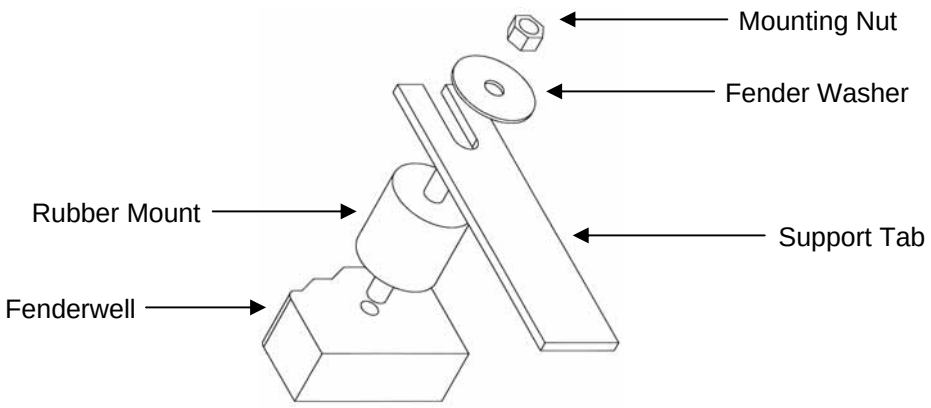

Installing the air bypass valve may, in some circumstances, cause a very minimal reduction in the increase of horsepower given by the cold air system. During non-rainy conditions, or race competitions a straight piece of silicon hose can be installed in place of the air bypass valve, which can be purchased from your local AEM® distributor.

Warning: Under normal driving conditions the air bypass valve will eliminate the chance of water ingestion. However if the vehicle becomes submerged in deep enough water, not even the stock air inlet system will prevent engine damage.

Air bypass valve template:

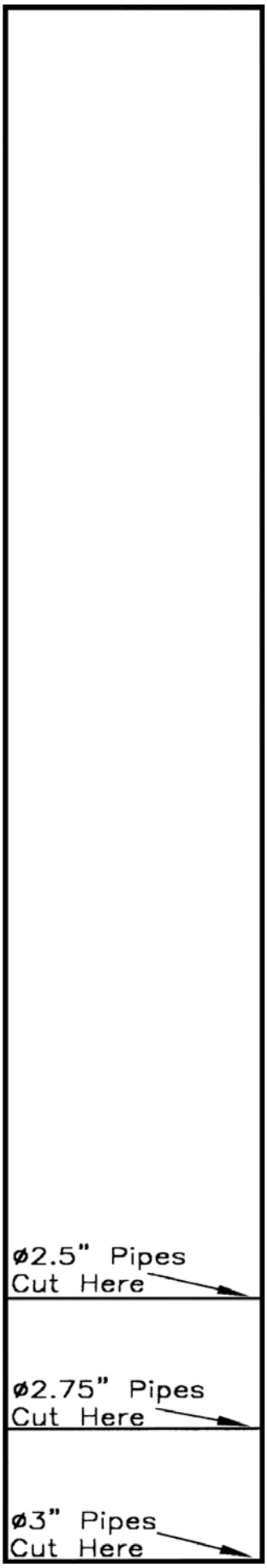

AEM Air Intake System Warranty Policy

AEM® warrants that its intake systems will last for the life of your vehicle. AEM will not honor this warranty due to mechanical damage (i.e. improper installation or fitment), damage from misuse, accidents or flying debris. AEM will not warrant its powder coating if the finish has been cleaned with a hydrocarbon-based solvent. The powder coating should only be cleaned with a mild soap and water solution. Proof of purchase of both the vehicle and AEM intake system is required for redemption of a warranty claim.

This warranty is limited to the repair or replacement of the AEM part. In no event shall this warranty exceed the original purchase price of the AEM part nor shall AEM be responsible for special, incidental or consequential damages or cost incurred due to the failure of this product. Warranty claims to AEM must be transportation prepaid and accompanied with dated proof of purchase. This warranty applies only to the original purchaser of product and is nontransferable. Improper use or installation, use for racing, accident, abuse, unauthorized repairs or alterations voids this warranty. AEM disclaims any liability for consequential damages due to breach of any written or implied warranty on all products manufactured by AEM. Warranty returns will only be accepted by AEM when accompanied by a valid Return Merchandise Authorization (RMA) number. Credit for defective products will be issued pending inspection. Product must be received by AEM within 30 days of the date RMA is issued.